Compliation of
Best Practice Catalog

HAP
HYDROPOWER
ADVANCEMENT PROJECT

Revision 2.0, 12/07/2012

Prepared by
OAK RIDGE NATIONAL LABORATORY
Oak Ridge, Tennessee 37831-6283
managed by
UT-BATTELLE, LLC
for the
U.S. DEPARTMENT OF ENERGY
under contract DE-AC05-00OR22725

and

MESA ASSOCIATES, INC.
Chattanooga, TN 37402

and

HYDRO PERFORMANCE PROCESSES, INC.
Doylestown, PA 18901

CONTENTS

Trash Racks and Intakes 18

1.0 Scope and Purpose 19

1.1. Hydropower Taxonomy Position 19

1.1.1 Components 19

1.2 Summary of Best Practices 21

1.2.1 Performance/Efficiency & Capability – Oriented Best Practices 21

1.2.2 Reliability/Operations & Maintenance - Oriented Best Practices 21

1.3 Best Practice Cross-References 21

2.0 Technology Design Summary 22

2.1 Material and Design Technology Evolution 22

2.2 State of the Art Technology 22

3.0 Operation and Maintenance Practices 24

3.1 Condition Assessment 24

3.2 Operations 25

3.3 Maintenance 26

4.0 Metrics, Monitoring and Analysis 30

4.1 Measures of Performance, Condition, and Reliability 30

4.2 Data Analysis 30

4.3 Integrated Improvements 31

5.0 Information Sources: 32

Penstocks, Tunnels and Surge Tanks 33

1.0 Scope and Purpose 34

1.1 Hydropower Taxonomy Position 34

1.1.1 Components 34

1.2 Summary of Best Practices 37

1.2.1 Performance/Efficiency & Capability - Oriented Best Practices 37

1.2.2 Reliability/Operations & Maintenance - Oriented Best Practices 37

1.3 Best Practice Cross-references 38

2.0 Technology Design Summary 39

2.1 Material and Design Technology Evolution 39
2.2 State of the Art Technology 39
3.0 Operation and Maintenance Practices 41
3.1 Condition Assessment 41
3.2 Operations 42
3.3 Maintenance 43
4.0 Metrics, Monitoring and Analysis 47
4.1 Measures of Performance, Condition, and Reliability 47
4.2 Data Analysis 48
4.3 Integrated Improvements 48
4.4 Integration: Example Calculation 49
5.0 Information Sources: 50
Flumes and Open Channels 51
1.0 Scope and Purpose 52
1.1 Hydropower Taxonomy Position 52
1.1.1 Components 52
1.2 Summary of Best Practices 54
1.2.1 Performance/Efficiency & Capability - Oriented Best Practices 54
1.2.2 Reliability/Operations & Maintenance - Oriented Best Practices 54
1.3 Best Practice Cross-references 54
2.0 Technology Design Summary 55
2.1 Material and Design Technology Evolution 55
2.2 State of the Art Technology 56
3.0 Operation and Maintenance Practices 58
3.1 Condition Assessment 58
3.2 Operations 59
3.3 Maintenance 60
4.0 Metrics, Monitoring and Analysis 65
4.1 Measures of Performance, Condition, and Reliability 65
4.2 Data Analysis 66

4.3 Integrated Improvements 67
5.0 Information Sources: 68
Draft Tube Gates 69
1.0 Scope and Purpose 70
1.1 Hydropower Taxonomy Position 70
1.1.1 Components 70
1.2 Summary of Best Practices 71
1.2.1 Performance/Efficiency & Capability - Oriented Best Practices 71
1.2.2 Reliability/Operations & Maintenance - Oriented Best Practices 71
1.3 Best Practice Cross-References 71
2.0 Technology Design Summary 72
2.1 Material and Design Technology Evolution 72
2.2 State of the Art Technology 73
3.0 Operation and Maintenance Practices 74
3.1 Condition Assessment 74
3.2 Operations 76
3.3 Maintenance 76
4.0 Metrics, Monitoring and Analysis 78
4.1 Measures of Performance, Condition, and Reliability 78
4.2 Data Analysis 78
4.3 Integrated Improvements 78
5.0 Information Sources: 79
Leakage and Releases 80
1.0 Scope and Purpose 81
1.1 Hydropower Taxonomy Position 81
1.1.1 Causes of Leakage & Releases 81
1.2 Summary of Best Practices 82
1.2.1 Performance/Efficiency & Capability - Oriented Best Practices 82
1.2.2 Reliability/Operations & Maintenance - Oriented Best Practices 83
1.3 Best Practice Cross-references 83

2.0 Technology Design Summary 84
2.1 Material and Design Technology Evolution 84
2.2 State of the Art Technology 84
3.0 Operation and Maintenance Practices 85
3.1 Condition Assessment 85
3.2 Operations 86
3.3 Maintenance 86
4.0 Metrics, Monitoring and Analysis 88
4.1 Measures of Performance, Condition, and Reliability 88
4.2 Data Analysis 88
4.3 Integrated Improvements 88
5.0 Information Sources 89
Francis Turbine 90
1.0 Scope and Purpose 91
1.1 Hydropower Taxonomy Position 91
1.1.1 Francis Turbine Components 91
1.2 Summary of Best Practices 93
1.2.1 Performance/Efficiency & Capability - Oriented Best Practices 93
1.2.2 Reliability/Operations & Maintenance - Oriented Best Practices 94
1.3 Best Practice Cross-references 95
2.0 Technology Design Summary 96
2.1 Material and Design Technology Evolution 96
2.2 State of the Art Technology 96
3.0 Operation and Maintenance Practices 98
3.1 Condition Assessment 98
3.2 Operations 104
3.3 Maintenance 104
4.0 Metrics, Monitoring and Analysis 110
4.1 Measures of Performance, Condition, and Reliability 110
4.2 Data Analysis 110

4.3 Integrated Improvements 111
5.0 Information Sources: 112
Propeller/Kaplan Turbine 114
1.0 Scope and Purpose 115
1.1 Hydropower Taxonomy Position 115
1.1.1 Propeller/Kaplan Turbine Components 115
1.2 Summary of Best Practices 117
1.2.1 Performance/Efficiency & Capability - Oriented Best Practices 117
1.2.2 Reliability/Operations & Maintenance - Oriented Best Practices 118
1.3 Best Practice Cross-references 119
2.0 Technology Design Summary 120
2.1 Material and Design Technology Evolution 120
2.2 State of the Art Technology 120
3.0 Operational & Maintenance Best Practices 123
3.1 Condition Assessment 123
3.2 Operations 129
3.3 Maintenance 131
4.0 Metrics, Monitoring and Analysis 138
4.1 Measures of Performance, Condition, and Reliability 138
4.2 Data Analysis 138
4.3 Integrated Improvements 139
5.0 Information Sources 141
Pelton Turbine 143
1.0 Scope and Purpose 144
1.1 Hydropower Taxonomy Position 144
1.1.1 Pelton Turbine Components 144
1.2 Summary of Best Practices 146
1.2.1 Performance/Efficiency and Capability - Oriented Best Practices 146
1.2.2 Reliability/Operations and Maintenance - Oriented Best Practices 147
1.3 Best Practice Cross-references 147

2.0 Technology Design Summary 149
2.1 Material and Design Technology Evolution 149
2.2 State of the Art Technology 149
3.0 Operation and Maintenance Practices 150
3.1 Condition Assessment 150
3.1.1 Runner 150
3.1.2 Housing/Discharge Chamber 151
3.1.3 Nozzle 153
3.1.4 Distributor/Manifold 155
3.2 Operations 156
3.3 Maintenance 157
3.3.1 Weld Repair 157
3.3.2 Grinding Template 157
3.3.3 Surface Coating 157
3.3.4 Turbine Shaft 157
3.3.5 Guide Bearings 158
4.0 Metrics, Monitoring and Analysis 159
4.1 Measures of Performance, Condition, and Reliability 159
4.2 Data Analysis 159
4.3 Integrated Improvements 160
5.0 Information Sources 163
Lubrication System 165
1.0 Scope and Purpose 166
1.1 Hydropower Taxonomy Position 166
1.1.1 Lubrication System Components 166
1.2 Summary of Best Practices 168
1.2.1 Performance/Efficiency & Capability - Oriented Best Practices 168
1.2.2 Reliability/Operations & Maintenance - Oriented Best Practices 168
1.3 Best Practice Cross-references 169
2.0 Technology Design Summary 170
2.1 Material and Design Technology Evolution 170

2.2 State of the Art Technology 170
3.0 Operation & Maintenance Practices 173
3.1 Condition Assessment 173
3.3 Operations 174
3.4 Maintenance 177
4.0 Metrics, Monitoring and Analysis 179
4.1 Measures of Performance, Condition, and Reliability 179
4.2 Analysis of Data 180
4.3 Integrated Improvements 180
5.0 Information Sources: 182
Governor 183
1.0 Scope and Purpose 184
1.1 Hydropower Taxonomy Position 184
1.1.1 Governor Components 184
1.2 Summary of Best Practices 186
1.2.1 Performance/Efficiency & Capability - Oriented Best Practices 186
1.2.2 Reliability/Operations & Maintenance - Oriented Best Practices 187
1.3 Best Practice Cross-references 187
2.0 Technology Design Summary 188
2.1 Material and Design Technology Evolution 188
2.2 State of the Art Technology 190
3.0 Operation and Maintenance Practices 192
3.1 Condition Assessment 192
3.2 Operations 194
3.3 Maintenance 196
4.0 Metrics, Monitoring and Analysis 199
4.1 Measures of Performance, Condition, and Reliability 199
4.2 Data Analysis 199
4.3 Integrated Improvements 200
5.0 Information Sources 201

Control/Shut-Off Valves 202
1.0 Scope and Purpose 203
1.1 Hydropower Taxonomy Position 204
1.1.1 Butterfly Valve Components 204
1.1.2 Spherical Valve Components 206
1.1.3 Cone Valve Components 207
1.1.4 Knife Gate Valve Components 208
1.2 Summary of Best Practices 209
1.2.1 Performance/Efficiency & Capability-Oriented Best Practices 209
1.2.2 Reliability/Operations & Maintenance-Oriented Best Practices 209
1.3 Best Practice Cross-references 209
2.0 Technology Design Summary 210
2.1 Material and Design Technology Evolution 210
2.2 State of the Art Technology 210
3.0 Operation and Maintenance Practices 211
3.1 Condition Assessment 211
3.2 Operations 211
3.3 Maintenance 211
4.0 Metrics, Monitoring and Analysis 213
4.1 Measures of Performance, Condition, and Reliability 213
4.2 Data Analysis 213
4.3 Integrated Improvements 213
5.0 Information Sources: 214
Raw Water System 215
1.0 Scope and Purpose 216
1.1 Hydropower Taxonomy Position 216
1.1.1 Raw Water System Components 216
1.2 Summary of Best Practices 219
1.2.1 Performance/Efficiency & Capability - Oriented Best Practices 219
1.2.2 Reliability/Operations & Maintenance - Oriented Best Practices 219
1.3 Best Practice Cross-references 220

2.0 Technology Design Summary 221
2.1 Material and Design Technology Evolution 221
2.2 State of the Art Technology 221
3.0 Operation & Maintenance Practices 224
3.1 Condition Assessment 224
3.2 Operations 225
3.3 Maintenance 228
4.0 Metrics, Monitoring and Analysis 230
4.1 Measures of Performance, Condition, and Reliability 230
4.2 Analysis of Data 230
4.3 Integrated Improvements 230
5.0 Information Sources: 231
Compressed Air System 232
1.0 Scope and Purpose 233
1.1 Hydropower Taxonomy Position 233
1.1.1 Compressed Air System Components 233
1.2 Summary of Best Practices 241
1.2.1 Performance/Efficiency & Capability-Oriented Best Practices 241
1.2.2 Reliability/Operations & Maintenance-Oriented Best Practices 241
1.3 Best Practice Cross-references 242
2.0 Technology Design Summary 243
2.1 Material and Design Technology Evolution 243
2.2 State of the Art Technology 243
3.0 Operation and Maintenance Practices 245
3.1 Condition Assessment 245
3.2 Operations 245
3.3 Maintenance 249
4.0 Metrics, Monitoring and Analysis 253
4.1 Measures of Performance, Condition, and Reliability 253
4.2 Data Analysis 253

4.3 Integrated Improvements 255
5.0 Information Sources: 256
Generator 257
1.0 Scope and Purpose 258
1.1 Hydropower Taxonomy Position 258
1.1.1 Generator Switchgear Components 258
1.2 Summary of Best Practices 261
1.2.1 Performance/Efficiency & Capability – Oriented Best Practices 261
1.2.2 Reliability/Operations & Maintenance Oriented Best Practices 261
1.3 Best Practice Cross-references 262
2.0 Technology Design Summary 263
2.1 Material and Design Technology Evolution 263
2.2 State of the Art Technology 264
3.0 Operation & Maintenance Practices 265
3.1 Condition Assessment 265
3.2 Maintenance 265
4.0 Metrics, Monitoring and Analysis 267
4.1 Data Analysis 267
4.2 Integrated Improvements 267
5.0 Information Sources 268
Main Power Transformer 270
1.0 Scope and Purpose 271
1.1 Hydropower Taxonomy Position 271
1.1.1 Main Power Transformer Components 271
1.2 Summary of Best Practices 274
1.2.1 Performance / Efficiency & Capability - Oriented Best Practices 274
1.2.2 Reliability / Operations & Maintenance - Oriented Best Practices 275
1.3 Best Practice Cross-references 277
2.0 Technology Design Summary 278
2.1 Material and Design Technology Evolution 278

2.2 State of the Art Technology 279
3.0 Operations & Maintenance Practices 281
3.1 Condition Assessment 281
3.2 Operations 282
3.3 Maintenance 283
4.0 Metrics, Monitoring and Analysis 289
4.1 Measures of Performance, Condition, and Reliability 289
4.2 Integrate Improvements 290
5.0 Information Sources: 291
Excitation System 292
1.0 Scope and Purpose 293
1.1 Hydropower Taxonomy Position 293
1.1.1 Exciter Components 293
1.2 Summary of Best Practices 296
1.2.1 Performance/Efficiency & Capability - Oriented Best Practices 296
1.2.2 Reliability/Operations & Maintenance - Oriented Best Practices 296
1.3 Best Practice Cross-references 297
2.0 Technology Design Summary 298
2.1 Material and Design Technology Evolution 298
2.2 State of the Art Technology 299
3.0 Operation & Maintenance Practices 300
3.1 Condition Assessment 300
3.2 Operations 301
3.3 Maintenance 301
4.0 Metrics, Monitoring and Analysis 304
4.1 Measures of Performance, Condition, and Reliability 304
4.2 Data Analysis 304
4.3 Integrated Improvements 304
5.0 Information Sources 306
Generator Switchgear 307

1.0 Scope and Purpose 308
1.1 Hydropower Taxonomy Position 308
1.1.1 Generator Switchgear Components 308
1.2 Summary of Best Practices 311
1.2.1 Performance/Efficiency & Capability – Oriented Best Practices 311
1.2.2 Reliability/Operations & Maintenance Oriented Best Practices 311
1.3 Best Practice Cross-references 312
2.0 Technology Design Summary 313
2.1 Material and Design Technology Evolution 313
2.2 State of the Art Technology 314
3.0 Operation & Maintenance Practices 315
3.1 Condition Assessment 315
3.2 Maintenance 315
4.0 Metrics, Monitoring and Analysis 317
4.1 Data Analysis 317
4.2 Integrated Improvements 317
5.0 Information Sources 318
Station Power System 319
1.0 Scope and Purpose 320
1.1 Hydropower Taxonomy Position 320
1.1.1 Station Power System (SPS) Components 320
1.2 Summary of Best Practices 328
1.2.1 Performance/Efficiency & Capability – Oriented Best Practices 328
1.2.2 Reliability/Operations & Maintenance – Oriented Best Practices 328
1.3 Best Practice Cross-references 329
2.0 Technology Design Summary 330
2.1 Material and Design Technology Evolution 330
2.2 State of the Art Technology 330
3.0 Operation & Maintenance Practices 334
3.1 Operations 334

3.2 Maintenance 334
4.0 Metrics, Monitoring and Analysis 341
4.1 Measures of Performance, Condition, and Reliability 341
4.2 Data Analysis 342
4.3 Integrated Improvements 342
5.0 Information Sources 343
I&C for Automation 345
1.0 Scope and Purpose 346
1.1 Hydropower Taxonomy Position 346
1.1.1 Plant Automation Components 346
1.2 Summary of Best Practices 350
1.2.1 Performance/Efficiency & Capability - Oriented Best Practices 350
1.2.2 Reliability/Operations & Maintenance - Oriented Best Practices 351
1.3 Best Practice Cross-references 353
2.0 Technology Design Summary 353
2.1 Technological Evolution 353
2.2 Design Technology 353
2.3 State of the Art Technology 355
3.0 Operation & Maintenance Practices 358
3.1 Condition Assessment 358
3.2 Operations 364
3.3 Maintenance 367
4.0 Metrics, Monitoring and Analysis 369
5.0 Information Sources: 371
Machine Condition Monitoring 374
1.0 Scope and Purpose 375
1.1 Hydropower Taxonomy Position 375
1.1.1 Condition Monitoring Transducers and Measurements 375
1.2 Summary of Best Practices 380
1.3 Best Practice Cross-references 381

2.0 Technology Design Summary 381
2.1 Technological Evolution and Design Technology 381
2.2 State of the Art Technology 381
3.0 Operation & Maintenance Practices 384
3.1 Condition Assessment 384
3.2 Operations 384
3.3 Maintenance 386
4.0 Metrics, Monitoring, and Analysis 387
4.1 Measures of Performance, Condition, and Reliability 387
4.2 Analysis of Data 387
4.3 Integrated Improvements 387
5.0 Information Sources: 389
Francis Turbine Aeration 390
1.0 Scope and Purpose 391
1.1 Hydropower Taxonomy Position 391
1.1.1 Components of a Francis Turbine Aeration System 391
1.2 Summary of Best Practices 395
1.2.1 Best Practices Related to Performance/Efficiency and Capability 395
1.2.2 Best Practices Related to Reliability and Operations & Maintenance 395
1.3 Best Practice Cross-references 395
2.0 Technology Design Summary 396
2.1 Technology Evolution 396
2.2 State of the Art Technology 397
3.0 Operation & Maintenance Practices 400
3.1 Condition Assessment 400
3.2 Operations 401
3.3 Maintenance 401
4.0 Metrics, Monitoring, and Analysis 403
4.1 Measures of Performance, Condition, and Reliability 403
4.2 Data Analyses 403

4.3 Integrated Improvements 404
5.0 Information Sources: 405

Best Practice Catalog

Trash Racks and Intakes

Revision 2.0, 8/02/2012

1.0 Scope and Purpose

This best practice for trash racks and intakes addresses the technology, condition assessment, operations, and maintenance best practices with the objective to maximize performance and reliability.

The primary purpose of the trash rack is to protect the equipment by keeping floating debris, leaves, and trash from entering the turbines. The primary purpose of the intake is to divert water at the river/reservoir source and deliver the required flow into the penstocks which in turn feed the hydropower plant.

1.1. Hydropower Taxonomy Position

Hydropower Facility → Water Conveyance → Trash Racks and Intakes

1.1.1 Components

The components of the trash rack and intake systems are those features that directly or indirectly contribute to the efficiency of water conveyance operations. The trash rack system is made up of the trash rack itself along with its cleaning and monitoring components. The intake system is comprised primarily of the intake structure, intake gates, and hoisting machinery.

Trash Rack: The primary function of trash racks is to protect equipment, such as wicket gates and turbines, from debris that is too large to pass through without causing harm. The trash rack is probably the single most important debris control device [1]. Typically, a trash rack consists of stationary rows of parallel carbon steel bars located at the water passage intake.

Trash Rake: The function of the trash rake is to remove any debris that accumulates on the trash rack. By cleaning the racks, trash rakes reduce head differential. Rakes vary in size to accommodate a variety of debris sizes. Rakes also vary in level of automation with some plants using manual trash rakes and others using semi-automatic and automatic mechanical systems.

Trash Boom: Floating barriers (permanent or temporary) constructed of a chain of logs, drums, or pontoons secured end to end located in the reservoir to prevent surface debris and logs from being drawn into the dam intake. There are two types of booms: 1) retention booms which are designed to hold debris out of a defined area and 2) deflector booms which divert debris around structures or away from intakes.

Skimmer Wall: Structure generally constructed of reinforced concrete located upstream of the intake used to divert debris away from the power intake.

Trash Conveyor: The function of the trash conveyor is to transport trash cleaned from the trash racks to a disposal location or transport vehicle. Trash conveyors reduce cost by eliminating the need for manual trash removal. Sometimes a trash sluice is located at the top of the trash racks to transport debris downstream of the intake.

Monitoring System: The function of a monitoring system is to measure head differential across a trash rack. The measurements can then be used to schedule trash cleaning or justify improvements.

Intake: The function of an intake is to divert water from a source such as a river, reservoir, or forebay under controlled conditions into the penstocks leading to the power plant. Intakes are designed to deliver the required flow over the desired range of headwater elevations with maximum hydraulic efficiency.

Intake Structures: Intake structures are commonly built into the forebay side of the dam immediately adjacent to the turbine. Another common intake design is a tower structure connected to a penstock. Tower intakes are often separate structures in the reservoir, typically constructed of reinforced concrete. Intake structures commonly house (1) trash racks that prevent large debris and ice from entering the water passages and (2) gates or valves for controlling the flow of water and for dewatering of the intake for maintenance purposes.

Intake Gates: An intake gate is arranged to shut off the water delivery when the conduit system has to be emptied. Types of gates include slide gates, roller and wheel-mounted gates, and radial gates. Modern intake gates are commonly designed to operate under unequal head conditions such as emergency closure during turbine runaway.

Stoplogs/Bulkhead Gates: Stop logs and bulkhead gates are used to block water so that construction, maintenance, or repair work can be accomplished in a dry environment. They are typically located either upstream of the headgates or downstream of the draft tube and designed to open or close only under hydrostatic head. Stop logs are stored in a secure storage yard, positioned by a crane and dropped into slots on the upstream pier of the dam or downstream of the draft tube to form a wall against the water.

Fish Passage/Protection Devices: Fish passage and protection devices are generally a condition of FERC licensure or mandated by natural resource agencies. Fish passages or bypasses allow migratory fish to pass around hydroelectric projects and avoid passage through the intake and turbine units. Protection devices such as screens and overlays are also used to reduce the clear width of opening at the power intake or fish bypass intake to regulate fish passage.

Air Vents: Air vents are typically incorporated in the intake structure and configured to prevent collapse of the penstock due to excessive vacuum when closing the intake gates.

Hoisting Machinery: Hoists are mechanical (electrically or manually driven), hydraulic (oil or water), or pneumatically operated machines used to raise and lower in place heavy water control features such as gates and stop logs.

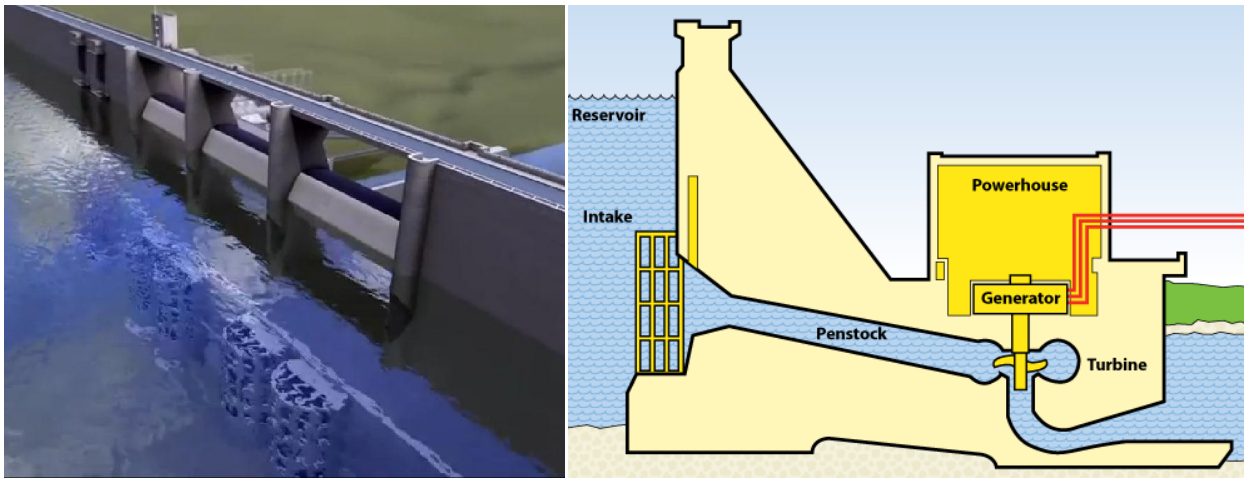

Figure 1: Illustrations of submerged intakes built into the face of the dam

Figure 2: Tower intake structures (Left: Blue Ridge Dam, Fannin County, Georgia; Right: Hoover Dam, Clark County, Nevada/Mohave County, Arizona)

1.2 Summary of Best Practices

1.2.1 Performance/Efficiency & Capability – Oriented Best Practices

- Routinely monitor and record unit performance at the Current Performance Level (CPL).
- Periodically compare the CPL to the Potential Performance Level (PPL) to trigger feasibility studies of major upgrades.
- Monitor and record head differential across trash racks.

1.2.2 Reliability/Operations & Maintenance - Oriented Best Practices

- Routinely inspect trash racks, intake gates, and associated components for signs of degradation.
- Trend trash rack and intake gate degradation and adjust life expectancy accordingly.
- Routinely clean trash racks as regulated by visual inspection, timed intervals, or head differential monitoring.
- Routinely inspect and maintain trash rack cleaning systems (e.g. trash rakes, conveyors).
    - Maintain documentation of the Installed Performance Level (IPL) and update when modification to equipment is made (e.g. trash rack replacement/repair, trash rake addition/upgrade).
- Include industry knowledge for modern trash rack system components and maintenance practices to plant engineering standards.

1.3 Best Practice Cross-References

- Civil – Penstocks and Tunnels
- Civil – Flumes and Open Channels
- Civil – Draft Tube Gates
- Civil – Leakage and Releases

2.0 Technology Design Summary

2.1 Material and Design Technology Evolution

Traditionally, trash racks were cleaned by hand with equipment developed by the personnel who used it (i.e., management and staff). Thus, these hand rakes became easier and easier to handle and some even had wheels. Even today, some hydropower plants clean their trash racks by hand. This requires intense manpower at times, particularly in the autumn when rivers are full of fallen leaves. The size and position of trash racks were influenced by the necessities of manual trash rack cleaning. Issues with manual cleaning of trash racks, including limitations on the flow rate, amount of on-site personnel required, and economic inefficiencies, led to mechanization of trash rack cleaners several decades ago. Manual cleaning typically requires a trash rack slope of at least 1 horizontal to 10 vertical. This is difficult to accomplish in water deeper than about 25 ft. Initial mechanization involved trash racks that were crossed upwards by a chain driven scraper with the collected trash dumped into a cross belt. Chain-driven trash rack cleaning machines are still in use today at small hydropower plants and quickly evolved into the classical wire rope trash rack cleaning machines that are in use today at medium and large plants.

2.2 State of the Art Technology

Currently used trash rack apparatus can be categorized by hydropower plant size. For medium-sized hydropower plants with cleaning lengths up to 65 feet, two types of trash rack cleaning machines are typically used: the classic wire rope trash rack cleaner, and the hydraulic or mechanical jib and mechanical articulated arm trash rack cleaner. For large-scaled hydropower plants, the wire rope trash rack cleaner is often used due to its ability to handle greater depths.

While the wire rope type trash rack cleaner has been in use for about 100 years, many advances have been made by the way it is transported. Many solutions to the debris storage problem have been implemented such as integrated containers used as buffer storage containers towed by the cleaner and trucks that follow the trash rack cleaning machine under their own power or by being positioned on a platform connected to the cleaner. Wire rope type trash rack cleaners can be used for nearly unlimited cleaning lengths such as 200 feet. The inclination of the trash rack should be at least 10 degrees to the vertical.

The mechanical articulated arm and hydraulic jib trash rack cleaners, which have been manufactured since the 1970's, have a base frame with a travelling device and a pivoted machine house with booms and a grab rake [10]. The revolving superstructure of the machine enables dropping of the trash beside or behind the railway of the trash rack cleaner or into a bin on the trash rake. The grab rake is designed to pick up oversized trees as well as to push floating debris to a sluicing weir. It has a scraper sliding along the trash rack bars. The grab rake can be rotated to conform to the position of a tree or other debris. Therefore, floating debris can be pushed to the weir to be drifted and large debris, such as trees, can be picked up by the grab rake and disposed of. The vertical cleaning depth is limited to about 50 to 60 feet, with greater cleaning lengths requiring the use of telescopic beams. This device also makes possible the use of cleaning vertical trash racks.

Intakes are designed to deliver the required flow over the desired range of headwater elevations with maximum hydraulic efficiency. Modern design basis requirements include geologic, structural, hydraulic and environmental attributes. The intake design should shape the water passages such that transformation of static head to conduit velocity is gradual, eddy and head losses are minimized, and the formation of vortices at the intake are limited. Advancement in computer modeling technology has yielded a more accurate design of intake structures for hydrodynamic loads, and particularly for updated seismic criteria as specified by modern building codes.

Hydraulic head losses can be mitigated during the intake design by limiting the velocity of the water through the trash rack and minimizing the acceleration of the water to achieve a smooth rate of acceleration. Trash racks should not be exposed and the intake gate lintel should be submerged below the minimum forebay level to lessen potential problems caused by air entrainment.

Recently, fish passage and protection devices are often a condition of FERC licensure or mandated by natural resource agencies. Therefore, advances have been made in bypasses for migratory fish to pass around hydroelectric projects and avoid passage through the intake and turbine units. There are both upstream and downstream passages. Examples of upstream fish passage techniques include fish ladders, mechanical devices (i.e. fish locks and elevators), natural channels, trap and transport, and fish pumps. Examples of downstream fish passage methods include spilling, trap and transport, diversion, and turbine passage (progress in development of "fish-friendly" turbines). For more information regarding the types of fish passages listed above refer to ASCE's *Civil Works for Hydroelectric Facilities – Guidelines for Life Extension and Upgrade* [3].

3.0 Operation and Maintenance Practices

3.1 Condition Assessment

If trash racks are located at or near the water surface, visual inspection from the surface may be possible. If trash racks are located far enough below the water surface that they cannot be seen from the surface, divers, underwater cameras, and/or ROVs (Remotely Operated Vehicles) may be used to perform inspections.

"ROV's may provide a more cost effective method for performing inspections – inspections that previously would have required risky diving operations or costly facilities dewatering [8]." The use of a new ROV system saved the U.S. Bureau of Reclamation more money in fixing one "serious problem" than the cost of the ROV [9]. "ROVs can often work in hazardous areas without requiring the dam to stop and tag out intakes and are not subject to diving limits of depth or duration [9]." Using sonar, ROV's can also work in low and zero-visibility environments. Both still and sonar images taken with a ROV can be seen in Figures 3 and 4 on the following page.

Plants should use manual or automated measurement tools whenever possible to monitor and record head differentials across trash racks to determine energy losses. Data from these measurements can be used to schedule trash rack cleanings and can be incorporated into systems for unit, plant, and system optimization [7]. When head differential data is used to quantify lost production, the calculated economic losses can be used to justify funding for improvements in trash rack cleaning methods and/or trash rack design [7].

The unique orientation of the intake structure in relation to the incoming water may have a significant impact on the overall effectiveness of the intake. Civil aspects of intakes include not only the structure, but also the gates that control the flow. Intake gate life expectancy should be at least 50 years, however corrosive water chemistry, poor coating performance and lack of maintenance can greatly shorten service life [11].

Hydro plant structures have design features to accommodate gates. These features include slots in piers/walls and embedded steel that provides bearing/sealing surfaces for the gates. The installation of the gates typically requires hoist lifting machinery. As the hydro plant ages, the intake gates are subject to wear, corrosion and physical damage. Seals are subject to deterioration and wear. Coating systems can wear or fail exposing steel to corrosion. The hoist lifting systems are subject to mechanical wear.

Concrete structures should be inspected for cracking and spalling. Observed cracks should be monitored to determine if the cracks are progressing or dormant. It is essential to note if the concrete defects are structural or non-structural. Although non-structural distress such as local spalling due to insufficient concrete cover may be unsightly, it is less likely to need to be addressed through remediation than structural cracking. Guides available to assist with concrete condition assessment include U.S. Army Corps of Engineers Manual EM-1110-2-2002, the U.S. Bureau of Reclamation Guide to Concrete Repair, and the American Concrete Institute Standards 201.1 and 364.1R.

Figure 3: ROV Still Image of Trash Rack*

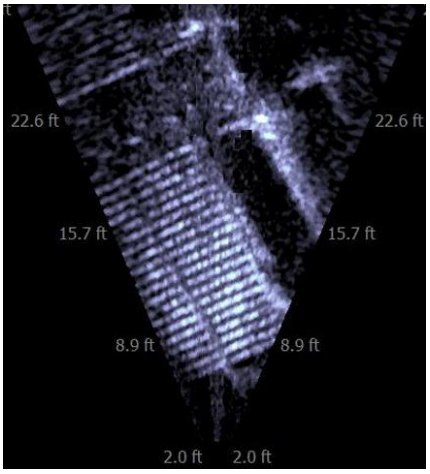

Figure 4: ROV Sonar Image of Trash Rack*

**Photos were taken using a VideoRay Pro 4 ROV and are courtesy of VideoRay LLC.*

3.2 Operations

Efficient and timely cleaning of trash racks can have a significant impact on the plant's efficiency and generation. Trash racks capture debris on their upstream surface which creates an energy (head) loss as water passes through them [6]. This energy loss can be excessive when the rack is clogged, reducing the net head for generation and potentially causing a significant reduction in plant efficiency. Although hydraulic losses due to debris accumulation can be costly, they are one of the most common avoidable losses occurring in hydropower plants [2]. Experience has shown that custom-engineered cleaning of trash racks can provide annual power production increases of up to 25% [7]. While there is a cost for cleaning equipment and cleaning operations, the benefits can be significant. Improved trash rack design can also improve efficiency and generation for clean, unclogged racks.

"If there is a need to intercept trash with a trash rack, then there is a need to remove the intercepted trash so that the flow of the water will not be hindered [6]." Some hydro plants have such a relatively small and/or infrequent debris load that cleaning can be carried out manually. Other plants have large debris loads (Figure 5), which require mechanical cleaning. Typically, shallower river intakes experience higher debris loadings compared to deeper intakes in lakes and reservoirs. Trash rack cleaning equipment should be selected to meet the site-specific type and magnitude of debris as well as the intake and adjacent dam/spillway layout and configuration.

Figure 5: Debris removed from trash racks can range in size from aquatic milfoil to tree trunks, shown here [2]

Plants located in colder regions may have the additional problem of frazil, anchor, and sheet ice accumulation on trash racks. This ice affects trash rack efficiency in the same manner as debris, clogging the trash rack and reducing the net generation head. In some cases ice may be removed by trash rakes, but more typically additional systems or operational procedures such as spilling/sluicing are needed to prevent the accumulation of ice [3]. See the discussion on ice prevention in the following section for more information.

The frequency of trash rack cleaning is site-specific and will vary from season to season at each plant. Cleaning systems should be operated as frequently as needed to maintain plant efficiency and capacity. Using head differential data as discussed in the above section, an automated cleaning system can be installed. See the discussion on automated trash rakes in the following section for more information.

3.3 Maintenance

As described in the system components, trash racks traditionally have been made of parallel vertical bars, and such installations have often served well for many decades. Protective coatings for carbon steel trash racks, such as epoxy paint, can increase their life expectancy by preventing deterioration due to corrosion, particularly if portions of the trash rack are periodically exposed to the atmosphere. However, coatings can be damaged due to scrapping during the cleaning process requiring frequent reapplication of the coating. In some cases, it is cheaper to replace structurally weakened racks than it is to repaint them periodically [6].

When trash racks are replaced, consideration should be given to improve trash rack design, including modifications to bar shape and increased corrosion protection. Although not commonly used, hydrodynamically shaped bars have lower head losses and are less affected by flow-induced vibration [4]. To protect against corrosion, stainless steel and high density polyethylene (HDPE) trash racks are available. The life expectancy of steel trash racks is typically 15 to 35 years and 25 to 50 years for plastic or fiberglass trash racks [3]. Some

installations also use cathodic protection systems to combat corrosion. These systems create a galvanic cell between the trash rack and an attached metal. The attached metal suffers corrosion, thereby protecting the trash rack [6]. Additional guidance in the replacement and detailed design of trash racks can be found in *The Guide to Hydropower Mechanical Design* [6].

In some environments, zebra mussels can be a significant issue at the trash racks. Zebra mussels can attach themselves to the trash rack bars and are often difficult to remove. In some cases, the buildup of zebra mussels can impact efficiency at the intake by reducing the clear opening between the bars. If the accumulation of zebra mussels is significant, HDPE bars or special coatings can be used to prevent the mussels from sticking. In less severe cases, periodic pressure washing of the racks is sufficient [3].

In colder regions where ice accumulation is a problem, it may be cost effective to take steps in preventing ice buildup. One approach is to install air bubblers or water circulating pumps at the bottom of the racks providing a thermal change of water temperature. Another approach is to alter the conductivity of the trash racks through replacement or modification. Installing non-conductive racks (HDPE) can usually solve the problem. If metal racks are used and they project above the surface of the water, a physical non-thermal conducting break can be installed just below the water surface. This will prevent below freezing temperatures from lowering the submerged trash rack bar temperature below freezing. Electrically heating the bars has also been used to prevent ice buildup, but the cost of doing so has not been proven effective or economical [3].

"The main problem with trash removal is that it can be labor intensive. All improvements or upgrades to the trash raking system that can help reduce costs and improve generation output should be considered [3]." An estimated 5% to 25% increase in power production can be seen with the addition of a custom engineered trash cleaning system, and the cost of these upgrades is usually justifiable [7]. The efficiency gained can be quite significant [5]. One utility determined that $500,000 per year could be recovered from trash-related problems at one of their "smaller" plants', and $250,000 per year at one of their "larger" plants [7]. There is a variety of trash rake systems currently available on the market (Figure 6). These systems range in size as well as level of automation, so they are applicable to almost every plant situation. The systems can be set to clean continuously, at a set interval, and/or whenever differential head reaches a specified level. Conveyor systems can also be installed to reduce the cost of trash removal (Figure 7). Due to the variety of trash rake options on the market, each plant must evaluate the type of rake that will benefit them the most. "Prior to selecting a particular type of rake or manufacturer, the owner needs to consider the physical location of the machine, the type of trash to be handled, and the complexity of the design and system used to run the trash rake [3]."

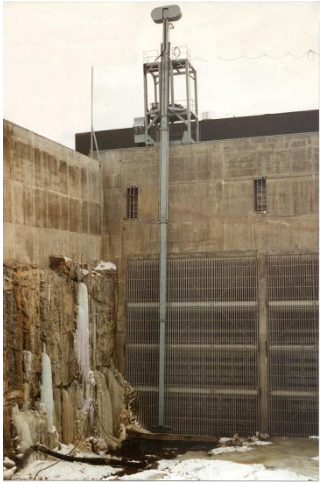

Figure 6: Trash Rake System (courtesy of Alpine Machine Co.)

Figure 7: Trash Rake Conveyer System (courtesy of Atlas Polar Co.)

Surface roughness in the intake can contribute to head loss. Since the intake structure is a relatively short portion of the water flow system, frictional head losses at the intake are usually insignificant, unless the surface profile has been extensively altered or deteriorated. The loss due to friction will increase as the intake walls roughen from cavitation or erosion in high flow areas. Cavitation frequently causes severe damage to concrete or steel surfaces and it may occur at sluice entrances and downstream from gate slots. Surface erosion resulting from debris is sometimes mistaken for cavitation, and cavitation damage may be difficult to determine from examination of the surface within the damaged area. Debris erosion may be identified by grooves in the direction of flow. For both causes, a potential upgrade on an intake having significant surface roughness or pitting would be to apply an epoxy concrete or cementitious repair mortar to the concrete surface. A wide range of these repair mortars are available having high bond strength and excellent workability likely to suit any concrete intake surface. In the case where damage has already occurred, metal-liner plates can be used to protect the concrete from the erosive action of cavitation. For heads above 150 feet, these liner plates should extend five feet downstream from the gate and should not terminate at a monolith joint or transition [10].

Another product that may be effective at reducing head loss at intakes is silicone based coatings used to prevent organic growth. This product also provides a very smooth surface on top of deteriorated areas on the interior intake surfaces. This coating system can be considered in lieu of repair mortar and liner plates in most cases. The potential upgrade to decrease the friction loss of an intake by applying a repair mortar, liner plate, or coating system is highly dependent on accessibility and will vary on a site-specific basis.

Intakes can also introduce head loss to the system through geometric changes in the intake wall structure. Intake walls may have slots to accommodate vertical gates or stoplogs. While the plant is generating power and the stoplogs or gates are removed or raised, these slots present irregular surfaces for flowing water. The void space of these slots will create

minor losses due to shape change. If the gates are not used as emergency closures in the conveyance system, slot fillers can be used to significantly reduce these losses. Slot fillers are often steel or aluminum frames that fit snug inside the slots providing a smooth surface for flowing water.

Other water conveyance issues that can negatively impact plant performance include valve issues, restrictions in discharge channels, and sedimentation. Each of these issues affect efficiency in proportion to the amount of head loss introduced to the conveyance system.

Efficiency can be gained by utilizing low-loss valves, such as gate valves, rather than higher-loss butterfly valves. Additionally, a partially open valve will cause more loss than a fully open valve. Therefore, care must be taken to ensure all valves are completely open when the system is in operation.

Restrictions in discharge channels, such as weirs and bridge piers, can cause water to back up behind them, increasing back pressure on the generation units and decreasing net available head. The location of these structures plays a critical role in whether plant performance is affected. Therefore, it is important to identify potential effects on generation when considering the installation of such a structure. Additionally, natural obstructions downstream from the dam, such as debris build-up or beaver dams, can cause similar decreases in hydroelectric production. Care should be taken to maintain a clear discharge channel, free of any major obstructions.

Plant efficiency can also be adversely affected by sedimentation in the reservoir behind the dam. Upstream bed sedimentation can partially block an intake, reducing the effective flow area and increasing the intake velocities, causing increased head loss at the intake. This issue could be remediated by occasional dredging of the reservoir immediately upstream of the dam.

4.0 Metrics, Monitoring and Analysis

4.1 Measures of Performance, Condition, and Reliability

The key measurements for a generating unit N include:

- ΔH_N – Head differential across the trash rack (ft)
- ΔH_{RN} – Reference head differential across the trash rack (ft)*
- Q_N – Unit flow rate (cfs)
- γ – Specific weight of water (62.4 pcf)
- T – Measurement interval for ΔH_N (hr)
- M_E – Market value of energy ($/MWh)
- E_{AN} – Actual energy generation (MWh)
- E_{RN} – Reference energy generation (MWh)*

**Reference values are found when the trash rack for a given unit is in its original (clean) state*

Measurements can be near real-time or periodic (hourly, daily, weekly, monthly) depending on the site details.

Utilization: Key Computations

Avoidable power loss P_N (MW) associated with ΔH_N:

$$P_N = 0.85 Q_N \gamma (\Delta H_N - \Delta H_{RN})/(737{,}562)$$

where 737,562 is the conversion from pound-feet per second to megawatts and 0.85 is a reduction factor to account for the water to wire efficiency of the turbines.

Avoidable energy loss E_N (MWh) associated with ΔH_N:

$$E_N = P_N T$$

Avoidable revenue loss R_N ($) associated with ΔH_N:

$$R_N = M_E E_N$$

Avoidable loss efficiency, $L_{eff,N}$ (%)

$$L_{eff,N} = (E_{AN}/E_{RN})100$$

Note that the costs associated with a trash cleaning operation should be established for comparison with the associated revenue losses and used to schedule cleaning, to evaluate and justify new cleaning equipment or trash rack re-design, etc.

4.2 Data Analysis

Determination of the PPL typically requires reference to new trash rack design information from vendors to establish the achievable unit loss characteristics of replacement racks.

The CPL is described by an accurate set of unit loss characteristics determined by unit testing/monitoring.

The IPL is described by the unit loss characteristics at the time of commissioning. This condition is used to determine the reference values in the calculations detailed in this best practice. These characteristics may be determined from vendor information and/or model testing conducted prior to or during unit commissioning.

The CPL should be compared with the IPL to determine decreases in trash rack efficiency over time. Additionally, the PPL should be identified when considering plant upgrades. For quantification of the PPL with respect to the CPL, see *Quantification for Avoidable Losses and/or Potential Improvements – Integration: Example Calculation*

4.3 Integrated Improvements

The periodic field test results should be used to update the unit operating characteristics and maintenance practices. Optimally, any test results or observations should be integrated into an automated system, but if not, hard copies of the data should be made available to all involved plant personnel (particularly unit operators). All necessary upgrades or maintenance and methods to routinely monitor unit performance should be implemented.

Integration: Example Calculation

A theoretical hydroelectric plant has a steel trash rack that has become clogged over time. The hydraulic properties of the trash rack are as follows:

- Head loss across clogged trash rack = 4.0 ft
- Head loss across clean trash rack = 0.5 ft
- Average flow across trash rack = 800 cfs

The avoidable power loss can be calculated as:

$$\Delta P = 0.85(800 \text{ cfs})(62.4 \text{ pcf})(4.0 \text{ ft} - 0.5 \text{ ft}) / 737{,}562 = 0.20 \text{ MW}$$

At an estimated market value of energy of $65/MWh, and assuming the plant produces power 75% of the time, the market value of power loss can be calculated as:

$$0.75(0.20 \text{ MW})(\$65/\text{MWh})(8{,}760 \text{ hours/year}) = \$85{,}500/\text{year}$$

This analysis indicates a significant avoidable energy and revenue loss over the performance assessment interval.

5.0 Information Sources:

Baseline Knowledge:

1. The United States Army Corps of Engineers, *Debris Control at Hydraulic Structures in Selected Areas of the United States and Europe*, CHL-CR-97-4, December 1997.

2. Jones, R. K., P. A. March, D. B. Hansen, and C. W. Almquist, *"Reliability and Efficiency Benefits of Online Trash Rack Monitoring,"* Proceedings of Waterpower 97, August 1997.

3. American Society of Civil Engineers, Civil Works for Hydroelectric Facilities: *Guidelines for Life Extension and Upgrade*, 2007.

4. *Hydro Life Extension Modernization Guides: Volume 1 – Overall Process*, EPRI, Palo Alto, CA: 1999. TR-112350-V1.

5. March, P. A., and P. J. Wolff, "*Component Indicators for an Optimization-Based Hydro Performance Indicator*," HydroVision 2004, Montréal, Québec, Canada, August 2004.

State of the Art:

6. American Society of Mechanical Engineers, *The Guide to Hydropower Mechanical Design, Kansas City, Missouri*: HCI Publications, July 1996.

7. EPRI, Hydropower Technology Roundup Report: *Trash and Debris Management at Hydroelectric Facilities*, TR-113584-V10, March 2007.

8. EPRI, Remotely Operated Vehicle (ROV) Technology: *Applications and Advancements at Hydro Facilities*, TR-113584-V7, December 2002.

9. VideoRay, "*US Bureau of Reclamation Reports Immediate Success with VideoRay Pro 4 ROV*," April 13, 2011, Retrieved from http://www.videoray.com/stories/278-us-bureau-of-reclamation-reports-immediate-success-with-videoray-pro.

10. Radhuber W., *"Trash Rack Cleaning – The Past-The Present – The Future,"* 15th International Seminar on Hydropower Plants, Vienna 2008.

11. Benson B., J. Blasongame, B. Chu, J. Richter and D. Woodward, *"Aging Plants – Time for a Physical": Conducting a Comprehensive Condition Assessment and the Issues Identified,"* HydroVision 2008.

It should be noted by the user that this document is intended only as a guide. Statements are of a general nature and therefore do not take into account special situations that can differ significantly from those discussed in this document.

Best Practice Catalog

Penstocks, Tunnels and Surge Tanks

HAP
HYDROPOWER
ADVANCEMENT PROJECT

Revision 2.0, 8/02/2012

1.0 Scope and Purpose

This best practice for penstocks, tunnels, and surge tanks addresses how innovations in technology, proper condition assessments, and improvements in operation and maintenance practices can contribute to maximizing overall plant performance and reliability. The primary purpose of a penstock or tunnel is to transport water from the intake and deliver it to the hydraulic turbine in the powerhouse. Once the water has been delivered to the turbine, it is then released downstream into the discharge channel.

1.1 Hydropower Taxonomy Position

Hydropower Facility → Water Conveyances → Penstocks, Tunnels, & Surge Tanks

1.1.1 Components

Penstocks: Penstocks are pressurized conduits that transport water from the headpond free water surface to a turbine. Penstocks can be either exposed or built integral with the dam structure as shown in Figure 1 and 2. Characteristics of functional penstocks are structural stability, minimal water leakage, and maximum hydraulic performance. Specific features of a penstock system include:

- Main Shell Material: Typically penstock shells are constructed of large round steel cross-sections. Fabricated welded steel is generally considered to be the better option when dealing with larger heads and diameters; however, pre-stressed or reinforced concrete, glass-reinforced plastic (GRP), and PVC plastic pipes are also utilized. Also, there are still many older wood stave penstocks in active service.
- Shell Linings and Coatings: The protective membrane applied to the interior (linings) and exposed exterior surfaces (coatings) which provide corrosion protection and water tightness.
- Connection Hardware: Includes rivets, welds, bolts, etc.
- Unrestrained Joints: Includes expansion joints or sleeve-type couplings spaced along the penstock span to allow for longitudinal expansion of the pipe due to changes in temperature.
- Air Valves: The primary function of air valves is to vent air to and from the penstock during both operating conditions and watering/dewatering of the penstock.
- Control Valves: Includes bypass, filling, shutoff valves, and gate valves used during watering and dewatering, redirecting flows, emergency shutoff, etc [2].
- Manholes and Other Penetrations: Includes items directly attached to the penstock and exposed to the internal pressure such as manholes, air vents and, filling line connections.
- Above Ground Supports: Includes saddles, ring girders, and anchor/thrust blocks which are susceptible to settlement or movement. The shell material and exterior coating are also more likely to experience premature failure at support locations due to high stresses and surface irregularities and should be periodically inspected.
- Surrounding soil backfill or concrete encasement for below ground structures

- Appurtenances: Includes transitions, bends, tees, elbows, and reducers. Appurtenances are especially susceptible to excessive vibrations, aging, and lining loss.
- Dewatering Drains: Drains located typically at low points along the penstock span used during dewatering. Since drains are prone to blockage or leakage, regular inspection and cleaning of drains should be implemented [2].
- Instrumentation: Any instrumentation associated with water conveyances. This can include pressure relief systems, emergency gate control system, and valve operators.

Figure 1: Exposed Penstocks at the Appalachia Hydroelectric Plant, Polk County, Tennessee

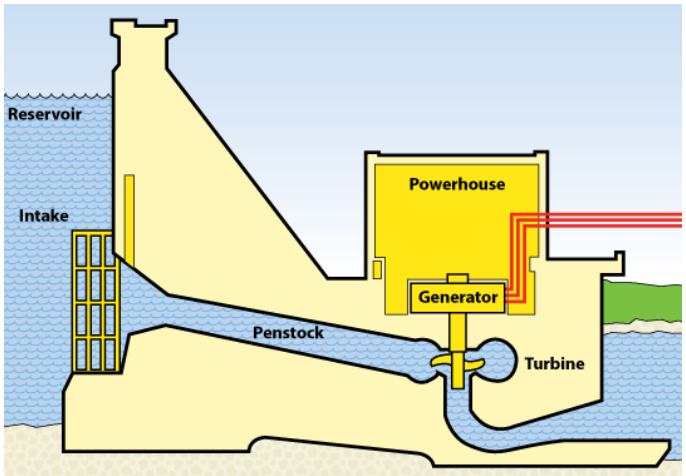

Figure 2: Penstock Integral with Dam Structure

- Tunnels: Tunnels are underground passageways commonly in rock used to carry water for power between two points. A typical arrangement is to convey water for power in a tunnel at low head, followed by a transition to a steep penstock to the powerhouse, with surge and vacuum pressures mitigated by a surge tank at the transition. A tunnel can be pressurized or unpressurized. Unpressurized tunnel flow is similar to open channel flow. This document addresses tunnels with pressurized flow. Depending on the condition of the surrounding rock or available tunneling technology, tunnels can be lined with concrete, shotcrete, or unlined. Different linings and rock conditions will determine the amount of water leakage and head loss through tunnels.

- Surge Tanks: The surge tank is an integral part of the penstock system whose purpose is to help provide plant stability and minimize water hammer by limiting the rise and fall of pressure within the penstock. Surge tanks also help to regulate flow, improve turbine speed regulation, and prevent penstock vacuum pressures during load acceptance. There are two categories of surge tanks: conventional atmospheric surge tank and closed air cushion surge chamber. Most North American surge tanks are of the atmospheric type and above ground. The atmospheric surge tank can have various shapes (horizontal area as a function of elevation) and overflow arrangements and are typically either a simple, restricted orifice, or differential type. Simple type tanks are tanks directly connected to the water conveyance pipeline or penstock. Restricted orifice tanks are similar to simple tanks but throttle flow in and out of the tank through an orifice. The differential type tank has a vertical riser similar to a chimney constructed inside the tank and connected directly to the penstock [9]. Any space that may be temporarily occupied by water during transient operation should be regarded as a surge tank (e.g. aeration pipe, gate shaft, access shaft). The air cushion chamber can reduce the total volume of the tank and can be designed for less favorable topographic conditions; however, maintenance may be needed for compressed air compensation. Surge tank excavated underground are typically lined with steel plate, wood, or reinforced concrete. They experience issues similar to that of penstocks such as deterioration or corrosion of tank material, breakdown in coatings and linings, and damage or deterioration to tank mechanical appurtenances. Figure 3 shows an example of a surge tank erected on the ground surface.

- Pressure Relief Valves: A mechanical valve within a pressurized conduit used to provide plant stability by mitigating pipe transient pressures within the penstock. Pressure valves are sometimes used in place of surge tanks. These valves can be used during both normal and extreme operating conditions. The valves are generally calibrated to open when the pressure acting on the valve reaches a preset value.

In some hydropower stations, the tailrace also consists of pressurized tunnels with or without surge tanks.

Figure 3: Steel Surge Tank at Isawa II Power Station in Japan

1.2 Summary of Best Practices

1.2.1 Performance/Efficiency & Capability - Oriented Best Practices

- Routine monitoring and recording of head loss through penstocks and tunnels.
- Trend head loss through penstocks and tunnels, comparing Current Performance Level (CPL) to Potential Performance Level (PPL) to trigger feasibility studies of major upgrades.
- Maintain documentation of Installed Performance Level (IPL) and update when modification to components is made (e.g. replacement of lining or coating, addition of slot fillers).
- Include industry acknowledged "up-to-date" choices for penstock and tunnel component materials and maintenance practices to plant engineering standards.

1.2.2 Reliability/Operations & Maintenance - Oriented Best Practices

- Develop a routine inspection and maintenance plan.
- If the exterior surface of a steel penstock is not already coated, provide exterior coating to protect penstock shell and extend life.
- Routinely inspect exterior supports or anchor blocks for signs of settlement or erosion. Misalignment of the penstock could also indicate slope stability and/or foundation issues or settlement.
- Regularly inspect joints for leakage, corroded or missing rivets or bolts, cracked welds and for concrete penstocks deterioration of waterstops or gaskets.

- Periodic internal inspections to detect deterioration.
- If build-up within the penstock presents unacceptable head losses, recommend high-pressure cleaning. If organic build-up is a persistent problem, recommend replacing liner with a fouling release type product.
- Repair/replace interior liners as required to prevent shell corrosion and extend the penstock shell life.
- Routinely inspect tunnels for signs of erosion or leakage.
- Water hammer or transient flow is an unavoidable and critical issue in any pressurized water conveyance system. Water hammer can result from any load variations, load rejections, operating mode changes, unit startup and shutdown, and operational errors. Water hammer and transient flow can cause major problems ranging from noise and vibrations to pipe collapse and total system failure. Therefore, water hammer protection devices such as surge tanks, air chambers, air valves, and pressure relief valves should be routinely inspected to ensure they are functioning properly. In addition, flow and load control devices such as the governor, turbine wicket gates, and penstock control valves should be routinely checked to prevent water hammer incidences. If found to be suspicious, measurements and further investigation should be immediately performed.
- Cursory inspections should be performed at monthly as a minimum.
- Periodic comprehensive inspections and evaluations should be performed every 5 to 10 years to determine the penstock's current condition.

1.3 Best Practice Cross-references

- Civil – Trash Racks and Intakes Best Practice
- Civil – Leakage and Releases Best Practice
- Civil – Flumes and Open Channels Best Practice
- Civil – Draft Tube Gates Best Practice

2.0 Technology Design Summary

2.1 Material and Design Technology Evolution

Coatings and linings for penstocks provide protection for the shell material and are critical to the performance and longevity of the penstock [7]. Coating and lining technology has rapidly evolved in recent years. Penstocks in many hydroelectric facilities have not been re-lined in several years or have only applied local repairs to the original linings. For this reason, it is crucial that plants perform routine evaluations as to the condition of both linings and coatings so as to avoid costly repairs or loss of revenue due to unscheduled shutdowns.

Historically, thin film (10 to 20 mills Dry Film Thickness (mDFT)) pipe liners were used to prevent steel corrosion. From the 1800's to 1940 a molten coal tar was used with a 15 to 20 year expected life span. However, these liners became brittle with time which led to cracking. Coal tar enamels became readily used after 1940 with an expected life span of 20 to 30 years. These liners were discontinued after the 1960's due to health and environmental concerns over high Volatile Organic Compound (VOC) levels. Between 1960 and 1980, coal tar epoxies were used; however, due to thinner applications, these liners had only a 15 year life span. It was not till the 1980's that high performance epoxies were commonly used (25 to 30 year life expectancy) [6]. Innovations in liners are rapidly evolving and more recently, since the early 1990's, thick film liners (up to 120 mDFT) have been used for both corrosion protection and to prevent leakage from areas such as pin holes and rivet seams. Most recent innovations in silicone and epoxy liners can reduce build-up due to organic growth (reduce frictional resistance) and increase the water flow turbine capacity. Also, newer liners have longer life expectancies and limit costly maintenance or repair expenses.

Tunneling technology has also evolved over the last decades. In the 1950's most pressurized tunnels and shafts were steel lined. Today, there are specialized techniques and design concepts for unlined, high-pressure tunnels, shafts, and air cushion surge chambers which have been developed and well-practiced in Europe and China. The cost of lining a meter of tunnel is often two to three times the cost of excavating the tunnel; therefore, new tunneling technology significantly saves in cost and construction time. This allows for the design of a larger cross-sectional area of tunnel with lower flow velocity. Larger tunnels are more tolerant of falling rocks and minor blockage along the tunnel floor given there is a rock trap at the end of the headrace tunnel. This trade-off in tunnel design and construction may not increase the head loss or leakage; however, the condition of the tunnel should be routinely inspected to detect serious collapses or local tunnel blockages.

2.2 State of the Art Technology

Penstocks are pressurized conduits designed to transport water from the headpond to the turbine with maximum hydraulic performance. By using state of the art technology for new liners such as silicone-based fouling release systems, the surface roughness of the penstock interior can be reduced (i.e. minimize frictional resistance) and organic buildup can be limited thus reducing head loss through the system. Advancement in computer modeling technology has also yielded more accurate

penstock designs for hydrodynamic loading limiting head loss, reducing water hammer effects, and extending life expectancy of both liners and shell material. In addition computer modeling allows for more accurate design for updated seismic criteria per modern building codes.

It is important to periodically collect and trend performance data on penstocks, tunnels, surge tank and associated components. Instrumentation technology is rapidly evolving and improving in accuracy and reliability. By using state-of-the-art technology, hydroelectric facilities can monitor pressure levels, movement, flow, temperature, stress, and strain. These measurements can alert plant personnel to any changes in performance levels or required maintenance. Also reliable performance data can be used to determine upgrade or modernization opportunities for water conveyance systems such as penstocks and tunnels.

State of the art tunneling technology allows for a larger excavation volume which reduces the flow velocity and thus reduces hydraulic head losses. The innovative containment principles and permeability control measures (e.g. grouting) used in tunnel design and construction can minimize water leakage through the rock mass.

3.0 Operation and Maintenance Practices

3.1 Condition Assessment

Since penstocks, tunnels, and surge tanks are exposed to occasional severe service conditions and are expected to perform reliably for extended periods of 50 years or more, they are prone to the following maintenance issues:

- Deterioration of linings and coatings
- Corrosion/thinning of steel penstock shell and other steel components
- Leaking at joints/couplings
- Erosion or cavitation
- Organic growth on interior surfaces
- Localized buckling
- General buckling caused by air vent blockage or pressure relief valve malfunction
- Foundation settlement
- Slope instabilities
- Sedimentation

Condition assessments of penstocks, tunnels, and surge tanks are conducted primarily by visual examination and physical measurements. The purpose of these inspections is to determine structural integrity, life expectancy, and necessary improvements of the conveyance components. Most parts of these components will be difficult to inspect. Typically, the interior inspections will require dewatering and will present a hazardous working environment, with poor ventilation, slippery surfaces, and steep inclines. Inspection of some components may require the use of divers or remote-controlled video equipment (e.g., remote-operated vehicles, or ROVs). If a penstock is buried or integral with the dam structure, an exterior inspection is not possible. Where exposed, the penstock exterior should be inspected during full operating pressure to detect any leakage [11]. Visual inspection typically includes assessments of corrosion, coatings, rivets/joints, general alignment, foundation conditions, and stability of supporting and adjacent earth slopes. Non-destructive examination (NDE) testing, which should be performed on penstocks where accessible, includes shell thickness measurements and dimensional measurements for alignment, ovalling, and bulging. Additionally, concrete structures must be inspected for excessive cracking and pitting. Baseline crack maps should be prepared so that trending can detect new or worsened conditions can be observed and documented [1].

It is important to schedule routine and thorough inspections of all penstock, tunnel, and surge tank components. This will help identify any defects or other maintenance issues. Through proper inspection, any unscheduled shutdowns for maintenance or repair can be minimized. When developing an inspection program, an important step in the planning phase is to acquire critical design

and operating histories. This can include, but is not limited to, the initial design criteria, geotechnical/foundation information, as-built drawings, construction information, operation history, and records of previous maintenance issues [6].

Once a comprehensive history of the penstock, tunnel, and surge tank performance has been acquired, personnel can develop an inspection plan. A schedule should be implemented to periodically monitor maintenance issues. Cursory inspections should occur at a minimum of once a month or more often depending on plant specific issues. Cursory inspections shall include visual observations for signs of obvious distress such as leakage, displacements or distortions, sudden changes in instrument readings, or unexpected operational performance [11]. Every 5 to 10 years the plant shall perform a more comprehensive inspection of the pressurized conduit. This inspection shall include visual inspection and subsequent non-destructive examinations and destructive testing as required. Comprehensive inspections may occur on a more frequent basis as determined by previously identified abnormalities or special events such as flood or earthquakes [11].

Several factors can affect how often inspections of penstocks and tunnels should occur, including age, accessibility, public safety or environmental concerns, construction, and previous maintenance problems [2]. An efficient and comprehensive inspection plan, specific for each facility, should be developed after carefully considering all contributing factors. As previously noted, inspections of penstock and tunnel components generally require dewatering of the system. Therefore, inspections would ideally occur during scheduled unit outages to minimize system down time. See Tables 2-1 and 2-2 in *Steel Penstock – Coating and Lining Rehabilitation: A Hydropower Technology Round-Up Report* [6] for additional guidance in developing an inspection program.

3.2 Operations

Periodic flow measurements should be obtained to determine that the water conveyance system is functioning optimally. It is also important to routinely monitor changes in pressure within the water conveyance system.

Performing a hydraulic transient analysis consists of computer simulation of the water conveyance system and turbine-generator units to calculate pressure at all critical locations in the system [2]. The actual maximum operating pressures within the system can then be periodically confirmed to match the design calculations through load rejection testing. Testing should be performed for a full range of operating conditions. The scope of measurement during the transient testing should include continuous records for the following:

- Pressures at the chosen points along the tunnel, penstock, immediately upstream and downstream of the turbine, and along the outlet tailrace tunnel;
- Pressures within the turbines: spiral case, head cover, under runner, and in the draft tube;
- Wicket gate openings;
- Angles of runner blades for the Kaplan turbines;
- Strokes of penstock control valves;

- Speed of turbine units;
- Displacement and vibration of bearings.

The recorded data is very important for transient investigation and analysis. In addition, the following parameters are to be recorded intermittently during steady-state operations before and after transient conditions. Note that these values should agree with the corresponding values recorded continuously.

- Water levels in head reservoir and tailrace;
- Wicket gate openings and angle of runner blades for Kaplan turbines;
- Pressures in penstock, upstream and downstream of the powerhouse, and the tailrace tunnel;
- Pressures within the turbines: spiral case, head cover, under runner, and in the draft tube;
- Electric current and voltage in the generator;
- Rotational speed of turbine units.

When observed and computer simulated values fit well with each other, the program of measurements and investigations could be shortened or revised. By determining the maximum and minimum operating pressures, a comparison to the original system design can be made which can help to identify significant operational changes and potential upgrade needs.

In addition, it is important to ensure that the penstock emergency gates are functioning properly, i.e. gates open and close freely with no binding or leakage. Emergency gate tests at balanced head should be performed on an annual basis and every 5 to 10 years for unbalanced head. Opening/closing times and operating pressure should be recorded for future testing comparison [2].

During plant operations, it is important to routinely inspect the exterior surfaces of penstocks for signs of leakage while penstock is under hydrostatic pressure. If any leaks are discovered, the source should be promptly identified and repair performed. Leakage not only accelerates deterioration over time, it may be indicative of more severe issues such slope instability, foundation movement, penstock misalignment, severe corrosion, or joint failure.

3.3 Maintenance

Penstocks and tunnels carry water from the intake to the generator and introduce head loss to the system through hydraulic friction and geometric changes in the water passageway such as bends, contractions, and expansions. Reduction of these losses through upgrades or replacement can improve plant efficiency and generation. However, because of the relatively small available efficiency improvements, these actions are unlikely to be justifiable on the grounds of reducing head losses alone [10]. Therefore, upgrading or replacing penstock and tunnel structures will typically be economically viable only if the plant is already scheduled for a shutdown to address other related improvements or maintenance concerns.

Although upgrades to penstocks and tunnels will have a minor effect on generation efficiency, scheduled maintenance and life-extending repairs of these structures are very important. Since any

unscheduled repair generally requires dewatering of the system with subsequent loss of power production, any plant shutdowns to repair penstock and tunnel structures will have a significant effect on plant availability and generation.

Evaluating head loss in penstocks and tunnels can point to ways of increased plant efficiency. Head loss can be caused by joints and bends, changes in diameter, and roughness and irregularities of conveyance structures. The geometry of a penstock or tunnel structure is not easily modified. Therefore, decreasing head losses by removing or reducing the number of existing joints and bends is not usually an economically viable undertaking. However, if replacement of a penstock or tunnel structure is required for other maintenance reasons, a detailed evaluation of the sizing and rerouting the waterway to increase efficiency would be warranted. In this case, the penstock or tunnel material and diameter should also be a design consideration. *Friction Factors for Large Conduits Flowing Full* [3] gives Darcy friction factors for different conduit materials and construction types as a function of Reynolds number (Re). These friction coefficients are directly proportional to the total frictional head loss. Therefore, if replacement is required, selection of lower friction material and construction types would be integral in reducing head loss through the penstock or tunnel structure. Head losses are also proportional to the square of the velocity, so the appropriate diameter should be verified. This is particularly important at older facilities where the hydraulic capacity requirements of the penstock or tunnel structure may have changed over time.

The internal surface roughness of penstocks contributes to head loss and can often be reduced to yield an increase in efficiency. "In one plant studied where the penstock is 130 feet long a net gain of head of 0.65 feet could be realized by replacing the riveted penstocks with welded steel, spun-tar lined penstocks. The generation gain would be more than one million kWh per year [10]." Surface roughness reductions can also be achieved by coating the inside of the penstock. Many different coating materials are available and the use of a specific material type will be dependent on project-specific needs. Some coatings not only improve surface roughness but can also prevent organic buildup. These coatings, such as silicone-based fouling release systems, should be considered where bio-fouling is a design consideration. Surface roughness may also be reduced by scrubbing and cleaning the interior of the penstock, removing buildup of foreign material such as invasive zebra mussels as shown in Figure 4. In one study, the surface roughness of two identical steel conduits was examined. One conduit surface was considered "quite smooth" while the other had accumulated significant organic buildup. The average Darcy friction factors under normal operating conditions were calculated at 0.13 for the smooth pipe and 0.20 for the pipe with buildup [3]. By restoring similarly affected penstocks to their original surface conditions, plant operators could expect comparable results, possibly reducing friction head losses by up to 35%, as in the case study.

Figure 4: Invasive Zebra Mussels on Steel Surface

Head loss in tunnels can be caused by similar hydraulic phenomena that affect head loss in penstocks such as sharp bends in routing, variations in diameter, and surface roughness of the tunnel wall. Tunnels can be both lined and unlined, and the roughness of the wall "relative to its cross-sectional dimensions is fundamental to the efficiency with which it will convey water [12]." Typical causes of head loss in tunnels that have the potential for efficiency upgrades include rock fallout in unlined tunnels, significant and abrupt changes in rock tunnel diameter, and organic buildup. "Slime growth in tunnels can be a serious problem…one plant is on record as losing 3% of maximum power due to this [10]." It should be noted that by relieving one problem, others may emerge. Removing organic buildup can expose rough linings or rock walls that have comparable head loss characteristics. Perhaps the best technique for improving efficiencies in tunnels is to decrease surface roughness by either filling in large cavities in the rock wall with grout or installing some type of lining. "A major modification for substantial reduction in head loss is the installation of concrete lining (or to a lesser extent a paved invert) in a formerly unlined tunnel [10]." Lining or grouting the tunnel wall can result in an increase in efficiency by reducing leakage into the surrounding rock which can reduce the available generation flow.

Penstock shell thickness measurements need to be taken and monitored periodically to identify losses in thickness, which must then be compared with minimum acceptable thickness values. If shell thinning exceeds acceptable values for structural integrity, corrective actions must be taken [11]. Deteriorated penstocks may be rehabilitated by patching localized areas, lining with a material such as fiberglass to reinforce the structure of the penstock, or replacing the existing penstock [8].

Figure 5: Exposed Portion of Penstock at Center Hill Hydro Plant in DeKalb Co., Tennessee

Another concern for penstock structural integrity is ovalization or out-of-roundness due to improper installation, design, or excessive external pressure during operation. If this occurs, the penstock diameter should be measured at various locations along its length and recorded to help monitor any geometric changes. Other possible structural problems that must be carefully monitored include penstock alignment, pinhole leaks, and localized shell buckling. Additionally, it is important to carefully inspect the shell liner for protrusions, caused by organic growth, marine organisms (e.g., mussels), and degradation of the linings or coatings – all of which can impede water flow [2]. Ultrasonic devices can be utilized for determining shell thickness. There have also been advances in remote-controlled video equipment (e.g., ROVs) for use in inspections of penstocks and intakes where access is limited that allow for safe and efficient inspections. Portions of penstocks that cannot be dewatered or readily dewatered should be periodically inspected by a diver or an ROV. For more information on non-destructive testing methods see *Steel Penstocks* [11].

After the inspection, an evaluation should be done to determine if corrective actions need to be taken and what is the best way to implement them. The evaluation of penstock and tunnel components should be performed by a qualified individual or team to determine the system's reliability to perform per the original design criteria and to make recommendations for future inspection frequency and areas of focus.

The key to improving system performance through penstock and tunnel component rehabilitation can be summarized as follows: 1) Development of an inspection/maintenance program based on individual system needs; 2) Effective implementation of the inspection program; 3) Proper evaluation of inspection results; 4) Recommendations for rehabilitation and repairs with focus on efficiency improvements and service life extension; and 5) Execution of upgrades and repairs with limited system shutdown time. Establishing a proper maintenance program can reduce the occurrence of unscheduled shutdowns and efficiency losses in penstock and tunnel components.

4.0 Metrics, Monitoring and Analysis

4.1 Measures of Performance, Condition, and Reliability

The fundamental equations for evaluating efficiency through penstocks and tunnels is the Darcy-Weisbach equation for head loss due to friction and the equation for head loss due to minor losses from geometric irregularities such as gate slots and bends. Avoidable head losses can be directly related to overall power/energy loss and subsequent loss of revenue for the plant. These equations are defined as follows:

Avoidable head loss due to friction, Δh_f (ft), from the Darcy-Weisbach equation:

$$\Delta \boldsymbol{h_f} = \Delta \boldsymbol{f} \frac{\boldsymbol{L}}{\boldsymbol{D}} \frac{\boldsymbol{V^2}}{\boldsymbol{2g}}$$

Where:
- $\boldsymbol{\Delta f}$ is the difference in Darcy friction factors computed for the existing roughness conditions and roughness conditions after potential upgrade
- **L** is the length of the conveyance component (ft)
- **V** is the average flow velocity or flow rate per cross-sectional area (ft/s)
- **D** is the hydraulic diameter (ft)
- **g** is the acceleration due to gravity (ft/s^2)

Avoidable head loss due to minor losses (e.g., gate slots), Δh_m (ft):

$$\Delta \boldsymbol{h_m} = \Delta \boldsymbol{K} \frac{\boldsymbol{V^2}}{\boldsymbol{2g}}$$

Where:
- $\boldsymbol{\Delta K}$ is the difference in minor head loss coefficients computed for existing wall irregularities from gate slots and for conditions with irregularities removed by use of slot fillers after potential upgrades.
- **V** is the average flow velocity or flow rate per cross-sectional area (ft/s)
- **g** is the acceleration due to gravity (ft/s^2)

Other key values required to complete the computations for avoidable head losses include the dimensionless Reynolds number, Re, Darcy friction factor, *f*, kinematic viscosity, *v* (ft^2/s), and equivalent roughness ε (ft). If the Reynolds number and relative roughness of the penstock shell or tunnel interior are known, the Darcy friction factor can be determined using either the Moody diagram or the associated Colebrook-White equation. If exact relative roughness measurements are unavailable, an approximate Darcy friction factor can be determined by comparing the existing conditions with charts found in publications such as *Friction Factors for Large Conduits Flowing Full* [3], which provide data of measured Darcy friction factors for various construction materials.

Avoidable power loss, ΔP (MW), associated with Δh_f or Δh_m:

$$\boldsymbol{\Delta P = 0.85\ Q\ \gamma\ \Delta h\ /\ 737{,}562}$$

Where:
- **0.85** is a factor to account for the water to wire efficiency of the turbines

· **Q** is the average volumetric flow rate through the plant (ft^3/sec)
· **γ** is the specific weight of water (62.4 lb/ft^3)
· **Δh** is the avoidable head loss
· **737,562** is the conversion from pound-feet per second to megawatts

Avoidable energy loss, ΔE (MWh), associated with Δh_f or Δh_m:

$$\Delta E = \Delta P T$$

Where: · **ΔP** is the avoidable power loss (MWh)
· **T** is the measurement interval (hrs.)

Avoidable revenue loss, ΔR ($), associated with Δh_f or Δh_m:

$$\Delta R = M_E \, \Delta E$$

Where: · $\mathbf{M_E}$ is the market value of energy ($/MWh)
· **ΔE** is the avoidable energy loss

4.2 Data Analysis

Determination of the Potential Performance Level (PPL) will require reference to the flow characteristics of the modified geometry and/or surface roughness of the penstock or tunnel components. The PPL will vary for each plant. However, the maximum PPL will be based on the flow characteristics of the most efficient available upgrade.
The Current Performance Level (CPL) is described by an accurate set of water conveyance component performance characteristics determined by flow and head measurements and/or hydraulic modeling of the system.
The Installed Performance Level (IPL) is described by the water conveyance component performance characteristics at the time of commissioning or at the point when an upgrade or addition is made. These may be determined from reports and records of efficiency and/or model testing at the time of commissioning or upgrade.
The CPL should be compared with the IPL to determine decreases in water conveyance system efficiency over time. Additionally, the PPL should be identified when considering plant upgrades. For quantification of the PPL with respect to the CPL, see *Quantification for Avoidable Losses and/or Potential Improvements – Integration: Example Calculation*.

4.3 Integrated Improvements

The periodic field test results should be used to update the unit operating characteristics and limits. Optimally, these would be integrated into an automatic system (e.g., Automatic Generation Control), but if not, hard copies of the data should be made available to all involved personnel (particularly unit operators), their importance emphasized, and their ability to be understood confirmed. All necessary upgrades or maintenance (penstock re-lining, penstock cleaning, etc) and methods to routinely monitor unit performance should be implemented.

4.4 Integration: Example Calculation

A theoretical hydroelectric plant has three girth-welded steel penstocks integral with the dam structure. The interior of the penstocks has significantly corroded over time. The hydraulic properties of each penstock are as follows:

- Length = 600 ft
- Diameter = 14 ft
- Average flow = 2200 cfs
- Average velocity = 14 ft/s

If the penstocks are treated with a silicone-based coating system, the decrease in head loss can be calculated as follows:

Surface roughness of existing penstocks (corroded steel w/ welded girth joints) = 0.005 ft

Relative roughness of existing penstocks = (0.005 ft) / (14 ft) = 3.6×10^{-4}

Surface roughness of silicone coating = 0.000005 ft

Relative roughness of silicone coating = (0.000005 ft) / (14 ft) = 3.6×10^{-7}

$$Re = (14\ ft/s)(14\ ft) / (1.0 \times 10^{-5}\ ft^2/s) = 1.9 \times 10^7$$

From the Moody diagram:

$$f_{existing} = 0.016$$

$$f_{silicone} = 0.008 \qquad \rightarrow \qquad \Delta f = 0.016 - 0.008 = 0.008$$

The decrease in head loss per penstock:

$$\Delta h_f = (0.008)\ [(600\ ft) / (14\ ft)]\ [(14\ ft/s)^2 / 2(32.2 ft/s^2)] = 1.04\ ft$$

The decrease in head loss in all three penstocks:

$$\Delta h_f = 3\ (1.04\ ft) = 3.13\ ft$$

The increase in power production can be calculated as:

$$\Delta P = 0.85(2200\ cfs)(62.4\ pcf)(3.13\ ft) / 737{,}562 = 0.495\ MW$$

At an estimated market value of energy of $65/MWh, and assuming the plant produces power 75% of the time, the market value of increased power production can be calculated as:

$$0.75\ (0.495\ MW)(\$65/MWh)(8{,}760\ hours/year) = \$211{,}500/year$$

This analysis indicates an available energy and revenue increase over the performance assessment interval.

5.0 Information Sources:

Baseline Knowledge:

1. Bureau of Reclamation, Veesaert, Chris J., *Inspection of Spillways, Outlet Works and Mechanical Equipment, National Dam Safety Program Technical Seminar Session XVI*, February 2007.

2. Bureau of Reclamation, McStraw, Bill, *Inspection of Steel Penstocks and Pressure Conduits, Facilities Instructions, Standards, and Techniques, Volumes 2-8*, September 1996.

3. Bureau of Reclamation, *Friction Factors for Large Conduits Flowing Full, A Water Resources Technical Publication, Engineering Monograph No. 7*, Reprinted 1992.

4. Pejovic, Boldy and Obradovic, *Guidelines to Hydraulic Transient Analysis.* Gower Publishing Company, Brookfield, Vermont. 1987.

5. *Hydro Life Extension Modernization Guide, Volume 3: Electromechanical Equipment*, EPRI, Palo Alto, CA: 2001. TR-112350-V3.

State of the Art:

6. Electric Power Research Institute (EPRI), *Steel Penstock – Coating and Lining Rehabilitation: A Hydropower Technology Round-Up Report, Volume 3*, TR-113584-V3, 2000.

7. American Society of Civil Engineers (ASCE), *Civil Works for Hydroelectric Facilities – Guidelines for Life Extension and Upgrade*, ASCE Hydropower Task Committee, 2007.

8. Kahl, Thomas L., *Restoring Aging Penstocks, Hydro Review*, December 1992.

9. Otter, Paul, *Design and Performance of a Differential Surge Tank, Hydro Review*, October 1988.

Standards:

10. EPRI, *Increased Efficiency of Hydroelectric Power*, EM-2407, Research Project 1745-1, Final Report, June 1982.

11. ASCE, Steel Penstocks, *ASCE Manuals and Reports on Engineering Practice No. 79*, 1993.

12. United States Army Corps of Engineers (USACE), *Engineering and Design – Tunnels and Shafts in Rock*, EM 1110-2-2901, May 1997.

13. USACE, *Engineering and Design – Hydraulic Design of Reservoir Outlet Works*, EM 1110-2-1602, October 1980

It should be noted by the user that this document is intended only as a guide. Statements are of a general nature and therefore do not take into account special situations that can differ significantly from those discussed in this document.

Best Practice Catalog

Flumes and Open Channels

Revision 2.0, 8/16/2012

1.0 Scope and Purpose

This best practice for flumes and open channels addresses how innovations in technology and design, proper condition assessments, and improvements in operation and maintenance practices can contribute to maximizing overall plant performance and reliability.

1.1 Hydropower Taxonomy Position

Hydropower Facility → Water Conveyances → Flumes / Open Channels

1.1.1 Components

Flumes and open channels are free-flow water conveyance systems for hydroelectric facilities. In certain hydro facilities the surface water reservoirs are not located directly adjacent to the generating station and the topographical or geological condition is not suitable for tunneling; therefore, necessitating the use of flumes or open channels to divert flow from the reservoir and convey the water over long distances. The primary purpose of flumes and open channels is to carry adequate water flows with minimized hydraulic losses [5]. Both flumes and open channels operate under the laws of open channel flow and have lower hydraulic gradients. They are used to typically transport water to either lower head stations or to higher gradient pressure conduits (i.e. penstock).

Flumes: A type of free-flow, man-made hydraulic channel generally square, rectangular, or semicircle constructed primarily of wood, steel, concrete, or masonry. Flumes can be supported on grade, piles, structural steel framing, concrete piers, or wood framing as show in Figure 1. Typically flumes are costly to construct; therefore, they are generally used to convey smaller quantities of water than open channels/canals or when the surrounding terrain necessitates the use of flumes.

Figure 1: Wood Flume (Bull Run Hydro Project, Oregon)

Open Channels: An upstream open channel is a type of free-flow water conveyance system used to transport water from its source (river, impounded lake, etc.) to the powerhouse, which is also referred to as intake canal, power canal, or headrace channel. A tailrace is often designed as an open channel (i.e., tailrace channel), rather than a tailrace tunnel, for discharging the tailwater collected from the turbines back into the original river/lake or to other rivers downstream. Open channels differ from flumes in that they are hydraulic channels excavated in the earth or rock (see Figure 2) whereas flumes are generally elevated man-made structures. Open channels can be constructed in various shapes and sizes and may either be lined or unlined.

Figure 2: Open Channel (Sir Adam Beck #1 Power Station, Niagara River, Canada)

Forebay: The primary function of a forebay structure is to provide limited storage for hydroelectric facilities during operational changes. These structures are typically sized to provide the initial water supply needed for turbine load acceptance when increasing plant output while water in conveyance components is being accelerated; as well as to accept the rejection or surplus water due to a decrease in plant output, such as during load rejection when the station is tripped off-line. Forebays may be a separate head pond or integral with the intake canal or open channel [5].

De-silting Chamber: A tank or chamber generally located upstream from water conveyance systems used to trap suspended silt load, pebbles, etc. so as to minimize erosion damage to the turbine runner.

1.2 Summary of Best Practices

1.2.1 Performance/Efficiency & Capability - Oriented Best Practices

- Routine monitoring and recording of head loss through flumes and open channels.
- Trend head loss through flumes and open channels comparing Current Performance Level (CPL) to Potential Performance Level (PPL) to trigger feasibility studies of major upgrades.
- Maintain documentation of Installed Performance Level (IPL) and update when modifications to components are made (e.g., replacement of liner).
- Include industry acknowledged "up-to-date" choices for flume and open channel design component materials and maintenance practices to plant engineering standards.

1.2.2 Reliability/Operations & Maintenance - Oriented Best Practices

- Develop a routine inspection and maintenance plan.
- Routinely inspect flume supports for signs of settlement or erosion.
- Regularly inspect structural joints for leakage, corroded or missing rivets or bolts, cracked welds, damage, etc.
- Routinely clean and remove debris from flumes and open channels.
- Routinely inspect and maintain debris removing/collecting systems (i.e. trash boom).
- Periodically remove sedimentation by dredging, flushing, vacuum extraction, or other available methods.
- Document any operational changes such as an increase in the Probable Maximum Flood (PMF), changes in flow requirements due to unit upgrades, changes in seismic criteria, or changes in operational regimes to compare with the original design criteria to ensure that the water conveyance component is functioning optimally and safely.
- As compared with a headrace channel, a tailrace channel is usually shorter and flow velocities are slower; therefore, head loss and water loss are less of a concern. However, flow capacity and safety of tailrace operations should not be compromised (i.e., sudden blockage of the tailrace might cause a severe accident).

1.3 Best Practice Cross-references

- Civil – Trash Racks and Intakes Best Practice
- Civil – Leakage and Releases Best Practice
- Civil – Penstocks and Tunnels Best Practice
- Civil – Draft Tube Gates Best Practice

2.0 Technology Design Summary

2.1 Material and Design Technology Evolution

Channel liners can be used to increase the hydraulic performance of open channels and flumes. Historically, open channels have been unlined or lined with erodible material such as sand or gravel. Unlined channels are plagued by several operational and maintenance-related issues such as erosion of embankment slope material, water seepage, hydraulic losses due to frictional resistance, and loss of hydraulic area due to vegetation growth or buildup of eroded material. Linings can improve hydraulic performance by improving discharging capacity, reducing frictional head losses, improving operational efficiency, extending channel life expectancy, preventing buildup due to vegetation such as weeds, reducing maintenance costs, and reducing seepage losses [1]. There have been recent innovations in liner materials and application processes. The use of geo-membranes has been used in recent years due to its ease of application and water-tightness.

The US Bureau of Reclamation conducted a 10 year study of various channel lining arrangements and their effectiveness on reducing seepage [6]. The three primary arrangements included concrete, exposed geomembranes, and a combination of concrete with a geomembrane under-liner. The concrete liner proved to have excellent durability; however, the long term effectiveness of preventing seepage was poor due to cracking. The installation and maintenance of a concrete liner is generally cost effective since plants are familiar with concrete and better equipped to provide routine maintenance such as crack repair. Figure 3 shows an example of a canal concrete lining project. The exposed geomembrane liner proved to be very effective in reducing or eliminating water losses due to seepage; however, they are more susceptible to damage than concrete and have a shorter service life (15 to 20 years) [6]. Geomembranes have a lower initial installation and maintenance cost, but the long term maintenance costs can be almost twice as much as concrete. This is because exposed geomembrane surfaces are more susceptible to damage and since plant personnel are generally not familiar with the material, special equipment and training may be required for even minor repairs. The third arrangement proved to be the most effective and easily maintained. By providing a geomembrane under-liner for the concrete lining, they were able to achieve the desired water tightness of a membrane while still having the durability and surface protection of the concrete. The maintenance costs are also lower since only the concrete top coat requires maintenance. Other material combinations that were tested included geosynthetics, shotcrete, roller compacted concrete, grout mattresses, soil, elastomeric coatings, and sprayed-in-place foam [6]. The appropriate channel liner should be addressed on an individual plant basis. Factors to consider when determining the most appropriate liner should include plant economics (maintenance and construction expenses), availability of local materials, local terrain limitations (use of heavy construction equipment may not be possible), amount of excavation or subgrade preparation necessary, environmental constraints, and desired hydraulic characteristics.

Figure 3: Coachella Canal Concrete Lining Project (Coachella County, California)

2.2 State of the Art Technology

For designing a new open channel system or considering replacement of an existing open channel or flume when it is severely deteriorated or no longer meets the operational requirements, computer-aided modeling can be used to develop the most efficient hydraulic arrangement (channel shape, longitudinal slope, side slope, minimum and maximum permissible velocities, type of lining, etc.) while balancing plant economics, site specific limitations, and construction limitations. For example, from a hydraulics stand point, the most efficient section for open channel flow is a semicircle since for a given area it has the least wetted perimeter than any other shape; however, a semicircle shape may not be the most economical solution since it costs more to excavate and line the curved surface, it may not be feasible for the available natural condition, or the arrangement may be limited by the channel slope. The use of scaled physical models has become standard procedure in recent years for the design of open channels. Scaled hydraulic models allow for performance to be checked while still in the design phase. Advances in computer technology can aid in the development of hydraulic models for testing. Both the numerical model (e.g., HEC-RAS) and physical model should simulate the unsteady flows with wave propagation and backwater effect along the channel under either routine or emergency plant operations. By checking performance, any necessary design changes or modifications that could potentially result in savings in operating and construction costs can be identified [9]. Therefore, computer-aided modeling can be beneficial in helping to balance hydraulic efficiency with plant requirements and economics.

In addition to advances in computer-aided modeling, construction techniques have also advanced. Historically, channels have been trapezoidal in shape due to limitations in constructability. As of recent years, advances in both lining and excavation techniques have allowed for curved bottomed channels which are hydraulically more efficient [10].

3.0 Operation and Maintenance Practices

3.1 Condition Assessment

Since flumes and open channels (including the forebay, de-silting chamber and tailrace channel) are periodically exposed to severe service conditions such as turbulent water or severe weather, they are prone to the following maintenance issues:

- Erosion of channel embankment slopes
- Structural deterioration
- Concrete spalling (canal linings, flumes, or guide walls)
- Steel corrosion (flume structural components or linings)
- Increased surface roughness due to aquatic growth/vegetation and erosion
- Sedimentation
- Water loss due to seepage through linings, joints, embankments, etc.
- Ice and debris collection or blockage
- Deterioration of linings
- Foundation settlement or deterioration
- Instability of adjacent slopes

It is important that flumes and open channels be routinely inspected for not only efficiency related maintenance issues but also safety, since failure of a flume or channel can have dire consequences. Condition assessments are primarily conducted by visual examination and physical measurements. The purpose of any water conveyance condition assessment is to determine the structural integrity of the components, the remaining life expectancy, and any necessary upgrades to improve overall efficiency. A visual inspection typically includes assessments of corrosion, lining deterioration, joint conditions (bolts, weld, etc.), evidence of embankment erosion or instability, seepage, foundation conditions, stability of supporting and adjacent earth slopes, and flow blockage due to debris or ice accumulation. It is also important to determine the condition, particularly the controls and operators, of flume and open channel headgates. The reliable operation of the headgates is critical to preventing embankment overtopping. This is particularly important at the remote stations where the headgates are automatically operated.

Since the interiors of flumes and open channels are often underwater and difficult to inspect, it is recommended that when components are required to be dewatered for other reasons, the plant should inspect the interiors and remove any debris or buildup of sedimentation. Flume exteriors should be visually inspected for any signs of leakage while in operation.

Data records from previous inspections, maintenance, and upgrades should be obtained. By reviewing any previous records, potential problems can more easily be identified such as worsening conditions or chronic issues. It is important to identify any previous repairs or repair

recommendations that might not have been implemented. Another key to an effective inspection plan is to review the original design documents. This can help to identify if: 1) obsolete construction methods that are known to have problems were used such as copper waterstops or unlined channels, 2) there are any obsolete components, configurations, equipment, or other features in use such as poor hydraulic shape for channels, 3) materials are nearing the end of their life expectancy, 4) there were any problems encountered during construction such as a fault zone across a channel or a soft zone in the foundation material, and 5) foundation issues such as geologic faults or differential settlement [3]. Plants should schedule routine and thorough inspections of all flume and open channel components. This will help to identify defects or other maintenance issues so that unscheduled shutdowns for repairs can be minimized. When developing an inspection program, it is also important to acquire information regarding operational records which should show any changes in operation or upgrades. It will allow for comparison of current operating conditions with the original design criteria.

The frequency and extent of inspections and condition assessments will be based on various plant and site specific factors including accessibility, age of structure or component, previous maintenance or reliability issues, public safety or environmental concerns, changes in operation, etc. Generally, cursory inspections should be performed at a minimum of once a month or more often depending on plant specific issues. Cursory inspections shall include periodic visual observations of the flume or open channel components for signs of obvious distress such as leakage, movement of supports, slope instabilities or erosion, and sudden changes in instrument readings or performance. Every 5 to 10 years the plant shall perform a more comprehensive inspection which not only includes visual observations, but also non-destructive examination and destructive testing. The role of a comprehensive inspection is to identify the root cause of an identified problem or to verify the structural competency of the flume or open channel. Comprehensive inspections may occur on a more frequent basis as determined by previously identified issues or special events such as earthquakes, floods, or unit load rejection that may have potentially resulted in damage.

3.2 Operations

Routine removal of debris and ice should be performed using trash/ice booms or similar. If debris or ice buildup is a recurrent issue, it is recommended that the plant consider installing permanent structures for aid in removal. Sedimentation can also have a negative impact on plant operations. Sediment should be routinely removed using methods such as dredging, vacuum extraction, flushing, mining dry while conveyance system is dewatered, or in more severe instances the addition of a stilling basin upstream to allow settlement of sedimentation or a sediment collection device. Also, increasing the flow velocity by reducing channel cross-sectional area can help the flow achieve ‘flushing velocity’; however, this is generally only a consideration in new design. By achieving the ‘flushing velocity’, accumulation of sedimentation is reduced; however, the sediment is passed downstream where it might still pose operational or maintenance issues such as turbine erosion. The addition of a de-silting chamber can also be installed upstream to help trap suspended silt particles. Buildup of sedimentation can increase surface roughness and reduce cross-sectional area, therefore increasing head losses due to frictional resistance. In addition, the removal of debris or ice buildup can increase flow. Thus routine cleaning practices can improve hydraulic performance through water conveyance systems and increase overall plant efficiency.

In northern environments, the formation of anchor ice in shallower channels is often a concern. A common technique for the prevention of anchor ice is to encourage the formation of surface ice early in the season. This can be done by reducing the channel velocities the first few nights of below freezing temperatures. The presence of surface sheet ice will reduce thermal cooling and prevent anchor ice from forming.

Plants should routinely evaluate any changes in the Probable Maximum Flood (PMF) from the original design criteria. If the PMF increases, structures should be re-evaluated through hydraulic model tests to determine that the existing conveyance system is still adequate. Miscalculation of PMF in the original design or failure to account for changes in PMF from recent hydrological analysis of watershed, may lead to overtopping of the canal embankment or failure. If the structural integrity of the system is not compromised, an increase in PMF can be addressed by raising channel embankments or constructing parapet walls; however, in some cases construction of a new conveyance system may be necessary [5].

Another important phenomena to consider in channel operations is hydraulic jump or hydraulic drop (fall). When high velocity flow (supercritical) is introduced to a section of slow moving flow (subcritical) resulting in a rapid reduction of flow velocity over a short length, the channel will experience an abrupt rise in water surface known as a hydraulic jump. Alternatively, a hydraulic drop is caused by the introduction of subcritical flow to supercritical flow causing a rapid increase in flow velocity and abrupt drop in water surface level. Sudden changes in channel bed slope can result in hydraulic jumps or drops. Hydraulic jumps and drops in the intake channel can negatively affect plant efficiency by dissipating energy and leading to head loss. Hydraulic jumps can be avoided by ensuring that transitions at the intake channel are gradual. Alternatively, hydraulic jumps may be desirable at the discharge when erosion in the downstream channel or river is a concern. Through hydraulic jump basins, the discharge energy can be dissipated before flow is returned to the downstream channel limiting erosion problems [2]. If hydraulic jumps or drops are observed, plants should consider further investigation into how the phenomena is impacting operations and if corrective action is warranted. Generally, this occurrence is only considered during the initial design or major rehabilitation projects since any upgrades to reduce jumps or drops are not economically feasible for improving efficiency alone.

Other operational considerations include increased flow requirements due to unit upgrades, changes in seismic criteria, changes in operational regimes, or any condition changes unaccounted for in the original design such as degradation conditions or increased surface roughness; as well as potential emergency circumstances (e.g., load rejection causing wave propagation and backwater effect) when the operational regimes and conditions have been changed. Plant personnel should routinely evaluate flumes and open channels to ensure that they are functioning properly and efficiently for the current operational characteristics.

3.3 Maintenance

Flumes and open channels are designed to convey water from its source (river, lake, reservoir, etc.) over a long distance to the intake or pressurized conduit (penstock or tunnel) or discharge water from the powerhouse to the downstream river/lake, while limiting losses due to hydraulic friction, seepage,

and leakage. Reduction of these losses through installation or repair of a liner or replacement of the conveyance system can help improve plant efficiency and generation; however, these upgrades can be costly and not likely justifiable on the grounds of reducing head losses alone [8]. Therefore, upgrade or replacement of a water conveyance component such as flumes or open channels is generally only viable if safety of the structure is a concern, the component no longer satisfies the operating requirements, there is significant seepage or erosion, or the water conveyance has severe degradation. Since upgrades or replacement can be costly, it is important to routinely schedule and perform any necessary maintenance or life-extending repairs so as to limit unscheduled shutdowns which can affect plant availability and generation.

Foundations and supports should be regularly checked for signs of seepage. Seepage is the slow percolation of water through an embankment or foundation [3]. Seepage not only results in loss of water it can also saturate the supporting soil and either undermine the foundation or cause it to shift or collapse. For canal earthen embankments focus seepage observations at penetrations that provide more direct potential seepage paths that can lead to piping [11]. Other foundation issues can include erosion, settlement which can lead to misalignment, foundation faults, heaving due to expansive foundation material such as clay. Erosion and stability of surrounding slopes are also a concern. Eroded material from surrounding slopes can cause blockages in channels or increase the hydraulic roughness. Failure of a surrounding slope can also negatively impact the structural integrity of flumes and channels, as was the case with the Ocoee River Flume in Tennessee. In April 2010, a rock slide destroyed a 70 ft section of the historic wood flume. The rock slope was stabilized using 90 bolts, some 40 ft long as shown in Figure 4 [7]. Other means of slope stabilization can include the addition of retaining structures or shotcrete. If large amounts of sloughed materials from surrounding slopes are present in flumes and channels, further investigation of slope stability is warranted.

Figure 4: Slope Stabilization (Ocoee River Flume, Ocoee, Tennessee)

Photo Courtesy of J. Miles Cary

Figure 5: Wood Flume Repair (Ocoee River Flume, Ocoee, Tennessee)

Photo Courtesy of Jason Huffine/TVA

It is critical that any obstructions within flumes or open channels be removed promptly so that the flow capacity is not negatively impacted. Obstructions can result from overgrown vegetation, aquatic growth, sloughed materials from adjacent slope failures, debris such as dead trees or limbs, or ice accumulation [3]. Obstructions such as these will not only impede the flow capacity, but can also lead to damage of the structure or liner, increased hydraulic roughness, or sudden failure due to blockage. Debris should be routinely removed so as to avoid buildup.

Since flumes and open channels are often subject to turbulent flow, concrete liners, structures, or foundations are likely to experience a range of concrete problems. These issues include cracking, surface defects, cavitation, erosion, and leakage at joints. Concrete cracking is a common phenomenon in hydroelectric facilities and does not necessarily require immediate action. Cracks should, however, be routinely monitored, measured, and documented for future comparison. It is necessary to have ongoing records documenting any cracks so that any significant changes can be identified. If new cracks suddenly appear or existing cracks become more severe or extensive, then further investigation by a qualified engineer is warranted [3]. Concrete surface defects may include shallow deficiencies in the concrete surface, textural defects from improper installation, and localized damage caused by debris [3]. Any surface defects should be recorded and any necessary repairs performed. Concrete deterioration due to either cavitation or erosion should be routinely monitored and repaired as necessary. Concrete repairs can include shotcrete applications, localized grouting of cracks, replacement or patching, or overlays for concrete liners.

Water loss through joint leakage is another common issue for open channels and flumes. Concrete channels often have waterstops which are continuous strips of waterproof material embedded in joints, usually made of metal, PVC, or rubber [3]. When waterstops are damaged or begin to deteriorate, water can seep through the joints. Not only does this lead to water loss, it can also lead to erosion of the foundation material or further joint damage due to freeze/thaw. Channel joints should be inspected when dry if possible. Evidence of joint problems can include soil fines seeping through the joint, vegetation in joints, or damaged or missing joint sealant [3]. Joints can be repaired by grouting, replacement of joint material or waterstops, sealing joints with epoxy, or the addition of a watertight membrane line along the entire channel.

Figure 6: Waterstop Repair in Concrete Channel

Steel can be used for flume supporting structures, channel liners, or flume liners. Since steel in hydroelectric facilities is repeatedly exposed to moisture, corrosion is oftentimes a recurrent problem. Evidence of steel corrosion can include scaling, flaking, pitting, or color changes. If left unchecked, corrosion can lead to loss of material, leakage, and in some instances failure of the structure. Corrosion can be limited or avoided by either painting the steel or installing cathodic protection. Other steel problems include fatigue due to repetitive loading, erosion by abrasive debris, tearing or rupture due to debris impact, cavitation due to high flow velocities, cracking, and deformation [3]. Plant personnel should regularly inspect all steel surfaces for any signs of deterioration or problems.

4.0 Metrics, Monitoring and Analysis

4.1 Measures of Performance, Condition, and Reliability

The fundamental equations for evaluating efficiency through flumes and open channels are Manning's equation for open channel flow, the equations for head losses due to friction and geometrical changes, and water losses due to seepage, leakage, or unexpected overflow (water loss from evaporation is minimal and unavoidable) [2 and 10]. Losses due to leakages or unexpected overflow are more difficult to quantify and require more detailed analysis based on a plant specific basis. Avoidable head losses can be directly related to overall power/energy loss and subsequent loss of revenue for the plant. These equations are defined as follows:

Flow quantity, $\boldsymbol{Q}$ (ft^3/sec):

$$\boldsymbol{Q} = \frac{\mathbf{1.486}}{\boldsymbol{n}} \boldsymbol{A}\boldsymbol{R}^{\mathbf{2/3}} \sqrt{\boldsymbol{S}}$$

Where:
- $\boldsymbol{Q}$ is the flow quantity (ft^3/sec)
- $\boldsymbol{n}$ is the Manning roughness coefficient
- $\boldsymbol{A}$ is the cross-sectional area (ft^2)
- $\boldsymbol{R}$ is the hydraulic radius (ft)
- $\boldsymbol{S}$ is the slope of energy line or energy gradient (ft/ft)

Head loss due to friction, $\boldsymbol{h_f}$ (ft):

$$\boldsymbol{h_f} = \boldsymbol{n}^{\mathbf{2}} \frac{\boldsymbol{L}\boldsymbol{v}^{\mathbf{2}}}{\boldsymbol{R}^{\mathbf{4/3}}}$$

Where:
- $\boldsymbol{h_f}$ is the head loss due to friction through the conveyance component (ft)
- $\boldsymbol{n}$ is the difference in Manning roughness coefficients for existing roughness conditions and roughness conditions after potential upgrades.
- $\boldsymbol{L}$ is the length of the conveyance component (ft)
- $\boldsymbol{v}$ is the average flow velocity or flow rate per cross-sectional area (ft/sec)
- $\boldsymbol{R}$ is the hydraulic radius (ft)

Head loss due to minor losses (e.g. channel bends, adjacent slopes), $\boldsymbol{h_m}$ (ft):

$$\boldsymbol{h_m} = \boldsymbol{K_b} \frac{\boldsymbol{V}^{\mathbf{2}}}{\mathbf{2}\boldsymbol{g}}$$

Where:
- $\boldsymbol{h_m}$ is the head loss due to minor losses from geometrical changes (ft)
- $\boldsymbol{K_b}$ is the difference in the head loss coefficient for existing conditions and for conditions after potential upgrades computed as follows for channel bends: $\boldsymbol{K_b} = \frac{\mathbf{2}\boldsymbol{W}}{\boldsymbol{R_c}}$
- $\boldsymbol{W}$ is the channel width (ft)

· $\boldsymbol{R_c}$ is the center-line radius of the channel curve (ft)
· $\boldsymbol{V}$ is the mean velocity or flow rate per cross-sectional area (ft/s)
· $\boldsymbol{g}$ is the acceleration due to gravity (ft/s^2)

Moritz formula for water losses due to seepage in unlined channels, $\boldsymbol{S}$ (ft^3/s/mile):

$$\boldsymbol{S = 0.2C(\frac{Q}{V})^{1/2}}$$

Where: · $\boldsymbol{S}$ is the losses due to seepage (ft^3/s/mile)
· $\boldsymbol{C}$ is the rate of water loss (ft^3/24 hours/1 ft^2 of wetted area). Average values of C can range from 2.20 for sandy soils to 0.41 for clays.
· $\boldsymbol{Q}$ is the flow quantity (ft^3/s)
· $\boldsymbol{V}$ is the mean velocity (ft/s)

Avoidable power loss, ΔP (MW), associated with head losses:

$$\boldsymbol{\Delta P = 0.85(Q\,\gamma\,\Delta h + \Delta Q\,\gamma\,h) / 737{,}562}$$

Where: · **0.85** is a factor to account for the water to wire efficiency of the turbines.
· **Q** is the average volumetric flow rate through the water conveyance component (ft^3/sec)
· **γ** is the specific weight of water (62.4 lb/ft^3)
· **Δh** is the avoidable head loss
· **737,562** is the conversion from pound-feet per second to megawatts

Avoidable energy loss, ΔE (MWh):

$$\boldsymbol{\Delta E = \Delta PT}$$

Where: · **ΔP** is the avoidable power loss (MWh)
· **T** is the measurement interval (hrs.)

Avoidable revenue loss, ΔR ($):

$$\boldsymbol{\Delta R = M_E\,\Delta E}$$

Where: · $\boldsymbol{M_E}$ is the market value of energy ($/MWh)
· **ΔE** is the avoidable energy loss

4.2 Data Analysis

Determination of the Potential Performance Level (PPL) will require reference to the flow characteristics of the modified geometry and/or surface roughness of the flume or open channel components. The PPL will vary for each plant. However, the maximum PPL will be based on the flow characteristics of the most efficient available upgrade.

The Current Performance Level (CPL) is described by an accurate set of water conveyance component performance characteristics determined by flow and head measurements and/or hydraulic modeling of the system.
The Installed Performance Level (IPL) is described by the water conveyance component performance characteristics at the time of commissioning or at the point when an upgrade or addition is made. These may be determined from reports and records of efficiency and/or model testing at the time of commissioning or upgrade.
The CPL should be compared with the IPL to determine decreases in water conveyance system efficiency over time. Additionally, the PPL should be identified when considering plant upgrades.

4.3 Integrated Improvements

The periodic field test results should be used to update the unit operating characteristics and maintenance practices. Optimally, any test results or observations should be integrated into an automated system, but if not, hard copies of the data should be made available to all involved plant personnel (particularly unit operators). All necessary upgrades or maintenance (channel lining, debris removal, slope stabilization, etc.) and methods to routinely monitor unit performance should be implemented.

5.0 Information Sources:

Baseline Knowledge:

14. Professor B.S. Thandaveswara, *Hydraulics: Design of Canals*, Indian Institute of Technology Madras.

15. Bureau of Reclamation, *Design of Small Dams*, A Water Resources Technical Publication, 3rd Edition, 1987.

16. Bureau of Reclamation, Veesaert, Chris J., *Inspection of Spillways, Outlet Works, and Mechanical Equipment*, National Dam Safety Program Technical Seminar Session XVI, February 2007.

17. *Hydro Life Extension Modernization Guide, Volume 4-5 Auxiliary Mechanical and Electrical Systems*, EPRI, Palo Alto, CA: 2001. TR-112350-V4.

State of the Art:

18. American Society of Civil Engineers (ASCE), *Civil Works for Hydroelectric Facilities – Guidelines for Life Extension and Upgrade*, ASCE Hydropower Task Committee, 2007.

19. Bureau of Reclamation, *Canal Lining Demonstration Project – Year 10 Final Report*, R-02-03, November 2002.

20. Tennessee Valley Authority (TVA), *Ocoee Flume Resumes Operation*, TVA News Release, April 22, 2011.

Standards:

21. Electric Power Research Institute (EPRI), *Increased Efficiency of Hydroelectric Power*, EM-2407, Research Project 1745-1, Final Report, June 1982.

22. United States Army Corps of Engineers (USACE), *Engineering and Design – Hydraulic Design of Flood Control Channels*, EM 1110-2-1601, June 1994.

23. Zipparro, Vincent J. and Hans Hasen, *Davis' Handbook of Applied Hydraulics*, 4th Edition, 1993.

24. Federal Emergency Management Agency (FEMA), *Technical Manual: Conduits through Embankments Dams*, September 2005.

It should be noted by the user that this document is intended only as a guide. Statements are of a general nature and therefore do not take into account special situations that can differ significantly from those discussed in this document.

Best Practice Catalog

Draft Tube Gates

Revision 2.0, 8/01/2011

1.0 Scope and Purpose

This best practice for draft tube gates addresses the technology, condition assessment, operations, and maintenance best practices for the gates and associated operating equipment with the objective to maximize performance and reliability of plant generating system.

The primary purpose of the draft tube gate is to protect the interior powerstation equipment of the hydropower plant including the turbine by providing a barrier and blocking water flow during maintenance and dewatering activities. Most draft tube gates fall under the category of "bulkhead gates or stop logs" that are normally lifted vertically into place and installed under no flow conditions for maintenance. They typically spend a vast majority of their lifecycle in storage rather than service. The gates may be sectioned or un-sectioned with the sectioned subassemblies lifted into place individually and stacked vertically. Although different materials have been used historically, draft tube gates are primarily made from carbon steel and therefore will be the primary focus for this best practice.

1.1 Hydropower Taxonomy Position

Hydropower Facility → Water Conveyance → Draft Tube Gates

1.1.1 Components

The components of the draft tube gate system are those features that directly or indirectly contribute to the effectiveness of the maintenance and dewatering operations. The system is made up of the draft tube gates itself along with the gate operating equipment.

Draft Tube Gate: Also referred to as stop logs or bulkhead gates, these assemblies are used to block water so that construction, maintenance, or repair work can be accomplished in a dry environment. These gates are stored in a secure storage yard, positioned by a crane, and dropped into slots on the pier, which is sometimes integrated with the dam, to form a wall against the water.

Draft Tube Gate Seals: Gate seals function to close off the open gap between the edge of a movable gate and a fixed sealing surface so as to prevent any water from passing through the interface. The seals are typically rubber material, and formed from a flat strip of rubber, or shaped by a molding or extrusion process.

Draft Tube Gate Hoists: Hoists are mechanical (electrically or manually driven), hydraulic (oil or water), or pneumatically operated machines used to raise and lower in place heavy water control features such as gates and stop logs. A lifting beam attaching the gate to the hoist is commonly a key component of the hoist system for draft tube gates.

Draft Tube Gate Bearing Structure: Openings are formed in reinforced concrete walls with dedicated piers at the edge of the openings to hold the draft tube gates in place. Slots are configured in the concrete piers to match the size and geometry of the edges of the gate to allow for a tight fit.

1.2 Summary of Best Practices

1.2.1 Performance/Efficiency & Capability - Oriented Best Practices

- Monitor leakage and functionality of the draft tube gates and include findings in the plant's unit performance records. The plant should routinely monitor and maintain a record of unit performance at the Current Performance Level (CPL).

1.2.2 Reliability/Operations & Maintenance - Oriented Best Practices

- Develop a routine inspection and maintenance plan.
- Routinely inspect draft tube gates, seals, hoists, and bearing structure components for degradation.
- Trend draft tube gates, seals, hoists and bearing structure components for degradation and adjust life expectancy accordingly to ensure that the system has the appropriate degree of functional reliability.
- Routinely inspect and maintain draft tube gate operating hoist and lift equipment.
- Maintain documentation of Installed Performance Level (IPL) and update when modification to equipment is made (e.g. gate seal replacement/repair, concrete piers/slots upgrade).
- Include industry knowledge for modern draft tube gate system components and maintenance practices to plant engineering standards.

1.3 Best Practice Cross-References

- Civil – Penstocks and Tunnels
- Civil – Leakage and Releases
- Civil – Trash Racks and Intakes
- Civil – Flumes and Open Channels

2.0 Technology Design Summary

2.1 Material and Design Technology Evolution

Figure 1: Norris Dam – Anderson/Campbell County, TN

A wide variety of draft tube gate designs have been used at hydropower plants over the course of the last century. Popular designs implemented include slide gates, roller gates, and stoplogs (wood or steel). As mentioned previously, the most commonly used gate is constructed of carbon steel members and plate. These steel gates have the advantage of being relatively inexpensive to construct and can be positioned using standard lifting equipment.

The Norris hydro plant had been in operation for nearly 60 years without dewatering equipment for the draft tubes. But modernization of the plant could not be accomplished without dewatering. Shown in Figure 1 is the initial installation of one of the new draft tube gates supported by the overhead traveling gantry crane connected by the lifting beam. The overhead gantry and crane rail girder is shown in Figure 2 while undergoing load testing. Other system components included in the design but not shown are the dewatering pumps, draft tube gate guides, and seal bearing plates.

Figure 2: Norris Dam – Anderson/Campbell County, TN

Difficulties have been experienced while lifting draft tube gates with a height to width aspect ratio of less than 1.0 from a central lift point. Gates of this configuration have an increased potential to tilt and bind in the gate slots while lifting. Providing two lift points one at each end of the gate or using a lifting frame assembly can alleviate this issue. The lifting assembly above includes a lifting beam, crane hook, hook lift points on the gate, and a gate dogging device for supporting the gate when not being utilized.

2.2 State of the Art Technology

The primary technological advances for draft tube gates are in the areas of the seals and corrosion protection of the steel. Seal geometry and means of attachment to the gate can be selected so that the seal is not susceptible to being rolled over due to the velocity of the water past the seal, or due to wedging of debris between the seal and the sealing surface. The double stem top seal, shown in Figure 3, is highly desirable due to its geometrical stability and ability to resist rolling over due to water velocity past the seal. Concrete and steel surfaces must be smooth, burr and rust free to prevent wear and damage to the seals. For steel sealing surfaces, a stainless steel overlay or cladding can be utilized to provide the seal with an unpitted and rust free sliding surface. An important advancement in draft tube gate design and fabrication in the past 40 years has been the use of rubber gate seals with a J-bulb or music note shape (See Figure 4). This advanced seal design allows for movement by using adjustable mounting attachments.

Figure 3: Solid Double Stem Seal

Figure 4: Solid J-Bulb Seal

3.0 Operation and Maintenance Practices

3.1 Condition Assessment

Conditions and problems associated with a draft tube gate, its guides, rails and seal plates, and crane can only be properly assessed if the various components are readily accessible. The draft tube gate assemblies spend most of their life cycle in storage rather than in service. The following are primary issues to be concerned with during a condition assessment of the draft tube gate assembly:

- Anomalies in gate slots in concrete piers
- Condition of seals, crane and lifting components, and electrical parts
- Debris jamming gates
- Corroded, bent, and damaged structural gate members and gate components

These common problem areas for draft tube gates can be assessed by a series of visual inspections to determine structural integrity, life expectancy, and necessary improvements. Prior to an assessment all maintenance records, previous inspection reports, and design drawings should be collected and reviewed. Each component should have a known physical condition and age from these supporting documents. This should assist in identifying existing problem areas as well as previous repairs.

These assessments will primarily be performed by visual examination and physical measurements for gates that are normally stored out of their slots and are readily accessible. For gates that are normally stored underwater in confined slots and are not visually accessible, it is necessary to temporarily pull the gates out of the slots so that they can be thoroughly inspected. Gate guides are normally underwater and will need to be inspected by a combination of divers and Remote Operated Vehicle (ROV) equipment. The determining factors of which underwater inspection method to utilize will depend greatly on the plant specific dewatering capabilities and required data collection. When a visual inspection is all that is required an ROV will typically be the most practical option. For this the ROV should be equipped with a lighting system and high quality video with an engineer present to direct the underwater observations and note areas of concern for either immediate closer viewing or for future inspection using a diver [3]. A disadvantage of the use of an ROV may be its limitation in turbid water due to poor visibility [4]. Diver disadvantages include regulations that restrict the allowable depths and durations of dives, the number of repeat dives in a given period, and limitations in cold climates [5]. Other difficulties encountered when using divers is the plant must shutdown the unit being inspected as well as the adjacent units.

The alkali chemical reactions caused by the chemistry between the water and some specific high alkali aggregates in the concrete can result in aggregate growth leading to concrete expansion. This occurrence is commonly known as Alkali-Aggregate Reaction (AAR). AAR can cause the gate to bind due to the reduction of gate opening and misalignment of the original opening with the gate geometry. Another cause of gate slot irregularities are local deterioration and spalling of the concrete that can lead to the pier slots geometry being out of tolerance with the gate. Exact measurements using calibrated instruments are an essential part of evaluating the concrete slots during the visual inspection. Therefore, gate slots and concrete piers that form the openings require access by divers to perform a thorough condition assessment. When using a diver, this person should be equipped with

lighting, voice communication, and an audio/video camera. Communication should be arranged so that the engineer supervising the inspection can view and be in direct contact with the diver. This ensures all required measurements and information are obtained.

Seals become damaged mainly due to excessive wear and environmentally caused deterioration (debris/flow past the seal). Also, over time the seal material will oxidize and become brittle making the seals more susceptible to damage. The visual inspection should carefully check for any debris trapped between the seal and the sealing surface. Seals can also be damaged by rolling over during gate lifting. The condition of the seal should be carefully documented, being sure to note any cracks, chips, or disfigurement.

The crane condition assessment should include the crane and all of the associated components. A mobile gantry crane typically utilizes a lifting beam to raise and lower the sectioned or un-sectioned draft tube gates into the gate slots. Common problems associated with the lifting beam include floating debris blocking the gate's lift lugs and malfunction of the lifting beam sheaves or lift lug engagement device. If applicable, moving parts should be properly lubricated, gearbox oil is free of contaminants/moisture, gears and bearings do not have excessive wear, and hoist ropes have no broken strands or deformation. When examining the rope it is important to evaluate the entire length especially the underside that contacts the drum or sheaves. Typically visual inspection of the rope is sufficient, however if the integrity or serviceability is in question for a critical application a non-destructive test method called magnetic flux leakage (MFL) is available. This MFL testing may be performed for further evaluation or the rope simply be replaced based on the associated cost and feasibility. The gearbox inspection should confirm that all items are properly lubricated and that water has not contaminated any oil reservoirs. Operate the mechanism at full operation cycle and all operating speeds. Abnormal sounds and vibrations coming from the gearbox may be indications of internal problems. If abnormal sounds or vibrations are observed, further internal inspection should be performed. [2]

Bent and damaged gate members could cause twisting of the gate, resulting in the gate not being lifted smoothly. The assessment should visually inspect for warped flanges of wide-flange and channel steel members, misaligned or partially loose exterior plates, loose bolts or rivets, other localized defects such as weld cracks and gouges, and signs of structural overstress (i.e., excessive deflections). Note the functionality of all gate components such as wheels and rollers and verify that they are properly lubricated.

Protective coatings are essential in ensuring the longevity of draft tube gates and preventing corrosion; therefore, condition assessments should include coating inspection. Some evidence of coating failure can include discoloration, peeling or flaking, blistering, voids, cracking, and fading. The Society for Protective Coatings (SSPC) has established guidelines and certification for protective coating inspections. It is recommended that these guidelines by consulted prior to condition assessment. Ideally, the coating inspection should be performed by a SSPC certified contractor/inspector.

The carbon steel used for construction of these gates will frequently corrode due to the aggressive environment experienced during storage or submerged conditions. This corrosion can range from

minor surface rust to significant cross-section loss. The minor surface rust can cause an abrasive and uneven sealing surface leading to degradation of the seals and leakage.

3.2 Operations

The draft tube gate functions during plant maintenance and dewatering activities, and is typically stored in a site yard during plant operations. Therefore, draft tube gates are not subjected to operational conditions. Problems associated with their functionality during these maintenance and dewatering periods will be discussed in detail in the following section on Maintenance.

3.3 Maintenance

Opportunities to improve draft tube gate performance involves properly diagnosing any of the common problems noted above in the Condition Assessment section, determining the apparent or root cause, and applying the most appropriate cost effective repair. It is imperative that the required maintenance be performed on the gates and the associated equipment. Consistently, performing the recommended maintenance on the appropriate schedule will extend the life of the component and help avoid unnecessary costs encountered due to emergency repairs and lost revenue during extended outages.

Problems with concrete openings not allowing the gates to be inserted properly are often due to the expansive nature of the concrete and any long term deterioration that reduces the clear opening leading to gate binding. There are a few methods for alleviating this condition including cutting back or trimming the concrete slots so as to enlarge the opening, trimming the edges of the gates to restore proper clearance, and fabricating a new gate that allows for some width adjustments. If concrete spalling is causing sealing difficulties because of significant surface roughness and pitting, an epoxy concrete or cementitious repair mortar may be used to restore the damaged surface.

Inadequate maintenance of seals and hoisting mechanisms can lead to several problems such as seal damage/rolling, unequal hoisting chain length and loading, and motor overload. When a gate is being lifted, seals can roll over and wedge the gate between the sealing surfaces, thereby damaging the seal and increasing the lifting loads to be overcome by the hoist. The corrective action involves replacing the gate seals and redesigning the means used to attach the seal to the gate, or using reconfigured seal geometry. Most seals at today's hydropower plants are made of rubber and can become worn or damaged over extended time periods of use. Worn or damaged seals can cause excessive leakage which results not only in loss of water, but can also lead to erosion of the concrete surfaces. Replacing the seals with the current bulb type, which are adjustable, provides more allowance for movement in the seal and provides capability to resist water pressures from either side. If excessive seal to guide friction is causing problems, this can be mitigated by providing fluorocarbon cladding to the seal bulb. J-bulb seals work best when allowed to deflect rather than compressing the bulb against the sealing surface.

Motor overload results from a non-uniform torque transfer into the hoist's gearbox. Overload causes include motor undersizing, additional frictional or resisting gate loads, drive shaft misalignment, and deterioration of the motor windings. Solutions include replacing the motor, diagnosing the workings of the hoist machinery and replacing any defective parts such as drive shafts, reduction gears,

bearings and drive train. If the problem cannot be shown to be directly related to the condition of the hoist, assess the gate to determine the cause of the additional loads that the hoist must lift.

Other issues to look for at regular maintenance periods include debris that is jamming gates and deformed/damaged gate structural members. Debris can readily get stuck between the gate and support piers or guides, causing binding of the gate. A common solution is to modify the gate to prevent debris from becoming wedged between the gate and gate supports. Modifications may include extending plates from the upstream side of the gate to reduce the width of the gap between the gate and the support piers or guides.

The expected lifespan of chains and lifting hardware is highly variable but can also be as low as 15 years particularly for portions that are exposed to fluctuating wet and dry cycles such as near the waterline. Gate rubber seal and paint service lives are approximately 20 to 25 years. For the steel parts (plates, structural shapes, bolts, welds, etc.) used for the draft tube gate assembly, 75 years is a reasonable service life when the proper attention is given to the initial surface coating/protection and regularly scheduled preventative maintenance. Often after 75 years of service, the area of the gate most in need of major repair or replacement is around the perimeter of the gate adjacent to the gate seals.

Bent and damaged gate structural members (i.e., steel wide flange and channel shapes) can lead to warping of the gate, resulting in the gate not being lifted smoothly. The only viable solution is to inspect the gate regularly, and remove and replace the damaged members as necessary. If welds between steel members and plates look visually flawed, ultrasonic testing can be performed to determine if the weld needs to be reconstructed.

The damage caused by minor corrosion can be limited with minor preventative maintenance such as coatings. If significant section loss is present due to corrosion, complete or partial replacement may be justified for gate members and its associated components.

4.0 Metrics, Monitoring and Analysis

4.1 Measures of Performance, Condition, and Reliability

For draft tube gates the measure for performance will be a direct result of its functionality. The purpose of these gates is to protect and keep water away from the required portions of the hydropower plant during dewatered maintenance and repairs. It is important that these gates function properly not necessarily for efficiency but for safety since failure can have dire consequences. Leakage of these gates can be tolerated as long as safety and equipment protection are not compromised. The leakage around the gate seals should be in the order of 0.01 gallons/minute per foot of wetted perimeter for rubber seals. For metal on metal seals the allowable rate of leakage is 0.1 gallons/minute per foot of wetted perimeter. [1]

4.2 Data Analysis

Leakage of these gates can be tolerated as long as equipment protection and safety are not compromised. Relatively small amounts of leakage can be tolerated and handled by pumping water out of areas maintenance will be performed. However, if pumping becomes excessive the cost of new seals, repair of gate guide seal mating surfaces, or other corrective actions may be justified.

4.3 Integrated Improvements

The field test results for leakage should be included when updating the plant's unit performance records. These records shall be made available to all involved personnel and distributed accordingly for upcoming inspections.

5.0 Information Sources:

Baseline Knowledge:

1. American Society of Civil Engineers, Civil Works for Hydroelectric Facilities: *Guidelines for Life Extension and Upgrade*, 2007.
2. US Army Corps of Engineers, *Hydro Plant Risk Assessment Guide*, Appendices E9 and E11, September 2006.
3. HCI Publication Paper No. 072, Aging Plants – Time for a Physical: Conducting a Comprehensive Condition Assessment and the Issues Identified, HydroVision 2008.
4. Bureau of Reclamation, McStraw, Bill, *Inspection of Steel Penstocks and Pressure Conduits*, Facilities Instructions, Standards, and Techniques, Volume 2-8, September 1996.
5. US Army Corps of Engineers, *Evaluation and Repair of Concrete Structures*, Engineering and Design, EM 1110-2-2002, 30 June 1995.
6. *Hydro Life Extension Modernization Guides: Volume 1 – Overall Process*, EPRI, Palo Alto, CA: 1999. TR-112350-V1.

It should be noted by the user that this document is intended only as a guide. Statements are of a general nature and therefore do not take into account special situations that can differ significantly from those discussed in this document.

Best Practice Catalog

Leakage and Releases

Revision 2.0, 8/02/2012

1.0 Scope and Purpose

This best practice for leakage and releases addresses technology, condition assessment, operations, and maintenance best practices with the objective to maximize performance and reliability. Leakage is an unintentional release of water and occurs to some extent at all hydroelectric facilities. In most cases the loss from leakage is less than 1% of the average flow [1]. There are certain cases where seepage can create a substantial loss of flow, but the cost associated with preventing this loss is typically very high and almost always outweighs the cost of lost generation. For these reasons, leakage is considered to have a minor impact on efficiency, performance, and reliability of the hydro plant.

The release of excess water from spillways and sluiceways when flow exceeds storage and generation capacity can become substantial over a long period of time. In some areas, meeting minimum downstream flow requirements can also result in the release of substantial amounts of water. Inadequate flow measurements can also lead to excess water losses through inaccurate releases. A variety of equipment is available on the market to generate electricity from releases without a powerhouse structure [8]. This equipment has the potential to provide a sizeable amount of power generation by harnessing the power from flow releases that previously generated no revenue, contributing to plant efficiency, performance, and reliability.

1.1 Hydropower Taxonomy Position

Hydropower Facility → Dam/Weir → Spillways/Weirs, Sluiceways/Low Level Outlets, Non-Overflow Dams

This best practice encompasses the leakage and releases issues associated with spillways, weirs, and sluiceways; also addresses seepage through the abutments and foundation of dams. The above chart indicates the position of this topic implied in the Taxonomy.

1.1.1 Causes of Leakage & Releases

Leakage is usually a minor problem in plant operations. In a survey on plant leakage, the average loss from leakage reported by plant owners was less than 0.5% of the average river flow. Very few plants reported unintended leakage in excess of 1% [1].

The most common and controllable source of leakage occurs at spillway gates due to inadequate sealing. Due to economical constraints, many older plants were built without gate seals [1]. Even where gate seals are used, they deteriorate over time.

Another form of leakage comes from seepage. Seepage occurs under the foundation or around the abutments of a dam. Small amounts of seepage are inevitable. Severe cases of seepage under the foundation, however, can cause major damage due to increased uplift pressure and piping of soils in embankment dams [13]. These cases are safety concerns, and repairs can be very costly. An example of this is Wolf Creek Dam in Kentucky where seepage under the dam required hundreds of millions of dollars in repairs [2].

Seepage around abutments can divert a portion of the reservoir's flow around the dam. For the most part, these leaks cannot be prevented except through costly repairs such as

reconstructing the upstream grout curtain or cut-off [1]. Although these techniques are costly and not always successful, in certain cases where it is found that seepage can be prevented, the reduction in losses can be substantial.

The primary purposes of regulated releases are to maintain a minimum required flow downstream of the dam and to regulate the water level of the reservoir. Minimum flow requirements ensure that various needs of the downstream community are met, such as:

- Protecting water quality and aquatic resources.
- Ensuring year-round navigation.
- Providing water for power production and municipal and industrial use downstream [3].

Several examples of plants with flow release requirements are found in Flow Measurement at Hydro Facilities: Achieving Efficiency, Compliance, and Optimal Operation [4].

Generation and releases make up the flow that a plant produces downstream. Inaccurate flow measurements from these sources can lead to an excess or insufficient flow being released from the reservoir. To provide a flow that meets regional requirements, many plants release more water than the required amount. Over time, this excess release can become a substantial loss of generation revenue. To obtain the highest efficiency, care should be taken to release the minimum amount of water above generation capacity to meet flow requirements. When releases are unavoidable, accurate flow measurements and gate calibration can increase efficiency.

1.2 Summary of Best Practices

1.2.1 Performance/Efficiency & Capability - Oriented Best Practices

- Routine monitoring and recording of gate leakage and downstream seepage.
- Trend gate leakage to trigger feasibility studies of seal replacement/addition or gate replacement.
- Trend downstream seepage to trigger feasibility studies of prevention techniques.
- Obtain information of releases at Current Performance Level (CPL) by measurements or models if none is currently available.
- Limit releases to minimum required flow, and only release when required.
- Use information of releases at CPL to regulate releases.
- Periodic comparison of the CPL of releases to the Potential Performance Level (PPL) to trigger feasibility studies of major upgrades.

- Maintain documentation of Installed Performance Level (IPL) and update when modifications are made (e.g. replacement/addition of seals, prevention of seepage, addition of generating equipment, changes in release control).
- Include industry acknowledged "up to date" choices, for leakage prevention and release control practices to plant engineering standards.

1.2.2 Reliability/Operations & Maintenance - Oriented Best Practices

- Monitor conveyance components and gates for signs of excessive leakage, and repair or replace damaged or defective components causing the leakage.

1.3 Best Practice Cross-references

- Civil – Penstocks and Tunnels
- Civil – Trash Racks & Intakes
- Civil – Flumes and Open Channels
- Civil – Draft Tube Gates

2.0 Technology Design Summary

2.1 Material and Design Technology Evolution

Gate seals are used to close the gap between the edge of a movable gate and a fixed sealing surface. Most gates of modern hydroelectric plants have seals that are made of rubber. However, wood, plastic, and even leather have been utilized for gates, typically under low head applications. Dissimilar metal was also a common pre-1950's seal material and was seen as a more durable, longer-lasting option [15].

2.2 State of the Art Technology

Performance data on leakage and releases is only as reliable as the methods used to collect the data. Emerging and state of the art technology continues to provide increasingly accurate instrumentation and analysis software to calculate hydraulic flow. These tools can then be used to determine the difference between the CPL and the PPL of hydro plant leakage and releases.

State of the art design of gate seals typically incorporates rubber as the primary seal material. Although the designed service life of rubber seals does not greatly exceed that of other materials, the biggest advantage comes from the reduction in leakage around the seals. Leakage around rubber seals is approximately 10 times less than that of metal on metal seals [15].

3.0 Operation and Maintenance Practices

3.1 Condition Assessment

To inspect for leakage from gates, visual inspection can be performed by observing if any water flows from the gates when they are closed. If the gates are not visible, it may be possible to observe the flow from their outlets.

To inspect for leakage caused by abutment seepage, a variety of methods may be implemented. In some cases simple visual inspection can be used. Muddy tailwater flows, sinkholes, and downstream appearances of leakage are all possible qualitative signs of seepage. Figure 1 on the following page shows an example of the appearance of leakage from Center Hill Dam in Tennessee [5]. A common approach for quantitative measurement is weir measurements with a V-notch weir (typical for smaller flows). Other cases may require the use of electronic, audio, or magnetic field measuring devices to find the cause of seepage [9 and 10]. An example of a technique using both electricity and magnetic field measurements is the Willowstick technique which can help to identify seepage root causes by mapping the seepage pathways [9]. USACE's *Seepage Analysis and Control for Dams* provides guidance in seepage analysis [13].

Figure 1: Appearance of Leakage (Center Hill Dam) [7]

It has historically been difficult to accurately measure the flows released from gates and spillways. Older plants have often relied only on charts that estimate flows for given gate opening heights. In plants where accurate measurements of flow release are unavailable, tests may obtain flow data and/or a physical or computer model can be produced. Using data collected through these methods, accurate flow measurements can be obtained. A list of flow

tests along with their applicability and advantages can be found in *Flow Measurements at Hydro Facilities: Achieving Efficiency, Compliance, and Optimal Operation* [4].

3.2 Operations

Gate seals deteriorate over time and should be inspected periodically. Any leaks discovered should be recorded and their severity monitored. While a small leak may cause a negligible loss, if left unchecked, it can become a much larger loss over time. In colder climates, gate leakage can cause ice build-up that can lock a gate into an immovable fixed position. This can cause significant risks for critical water control gates.

Seepage in one form or another occurs at all dams. Therefore, the appearance of any of the signs of seepage previously mentioned may not indicate a need for repair. These signs should be monitored. If they worsen or are accompanied by other signs, the operators should investigate the source of seepage before permanent damage occurs. Downstream appearances of water should be monitored. These may be from a separate source or may be water escaping the reservoir through seepage. The volume of flow from these sources should be recorded regularly, and any increases may indicate a need for further investigation [13].

Once accurate flow measurements are obtained, they can be used to regulate releases more efficiently. In plants where previous data of flow through gates and spillways are available, the flow measurements can be used for gate calibration. In plants where no previous data of flow through gates and spillways is available, the flow measurements can be used to implement a procedure for flow control.

Operators should consider altering generating schedules if excess amounts of water are being released through spillways and gates. Any water released from the reservoir that is not used to generate electricity is ultimately a loss of revenue.

3.3 Maintenance

Over time, gate seals will deteriorate and will need to be replaced. If possible, seals should be replaced when the gates are out of use, either from dewatering or seasonal reservoir level drops. To reduce maintenance, the use of improved seals may be a cost effective solution. In cases where no seals are present, it may be cost effective to install seals on the gates. In extreme cases of leakage, particularly where gates are severely deteriorated or have an outdated design, it may be cost effective to replace the gate entirely if the addition or replacement of seals is not sufficient.

Seepage prevention is typically a costly improvement and does not always fix the problem. Grout curtains are the most common form of seepage prevention [14]. Even after they are installed, seepage water may still find a path around the grouting or may find an outlet further downstream. In the case of Great Falls Dam in Tennessee, an extensive grouting program was successful in stopping 98% of reservoir leakage [6], but the largest of the uncorrected leakage, located a few hundred feet downstream from the powerhouse, has increased since the grout curtain was installed. This leakage can be seen in Figure 2. Operators must take care to ensure that seepage prevention is a cost effective endeavor. In many cases the small amount of water lost cannot justify the cost of correcting the problem.

A variety of seepage control methods and their appropriate applications can be found in *Seepage Analysis and Control for Dams*, EM 1110-2-1901 [13].

At some point every plant must release water due to the generator or reservoir capacity limit. Some plants, however, require a large volume of releases for environmental purposes such as improving dissolved oxygen (DO) levels in the tailwater. There is a variety of equipment that can be installed to generate power from these types of releases without the need for a powerhouse. Some of the most recent hydro generation equipment can be found in "Top 5 Developments in Hydro" [8]. Among these are a fully-sealed combined axial turbine and generator [11] and hydrokinetic technologies [12]. These options can utilize previously unused generation potential from environmental releases.

Figure 2: Great Falls Leakage (powerhouse shown at left)

Additionally, some plants use releases to provide required dissolved oxygen concentrations downstream of the dam. For these plants, the releases may not coincide with minimum flow requirements and therefore contribute to decreased plant efficiency. Other means of providing minimum dissolved oxygen, such as aeration weirs or aerating turbines, are recommended in this case.

4.0 Metrics, Monitoring and Analysis

4.1 Measures of Performance, Condition, and Reliability

The fundamental process of a hydro plant can be described by the power equation. In the case of leakage and releases, the power loss can be determined based of the following calculation:

The general expression for power loss (P): $P = \frac{0.85Q\gamma H}{737,562}$

Where:
- **0.85** is a factor to account for the water to wire efficiency of the turbines.
- **P** is the power loss of the hydroelectric plant (MW)
- **Q** is the flow rate lost through leakage or releases (ft^3/s)
- **γ** is the specific weight of water (62.4 lb/ft^3)
- **H** is the effective pressure head across the system (ft)
- **737,562** is the conversion from pound-feet per second to megawatts.

4.2 Data Analysis

Performance levels for leakage and releases can be stated at three levels as follows:

- The Installed Performance Level (IPL) is described as the loss characteristics at the time of the plant's commissioning or at the point when an upgrade, addition, or modification is made.
- The Current Performance Level (CPL) is described by an accurate set of loss characteristics encompassing all sources of leakage and releases. It is important to locate and accurately quantify all sources of leakage and releases for this performance level.
- The Potential Performance Level (PPL) is ideally considered as the condition where no power generation loss occurs from leakage or releases. However, this ideal condition is never completely obtainable. Therefore, the PPL can be considered as the condition where the minimum amount of losses can be obtained through upgrade to the best designs and technologies.

Analysis of performance data shall determine plant efficiency relative to power generation. The results from the analysis (CPL) shall be compared to previous or original performance data (IPL) as well as the efficiency gained from potential improvements to leakage and releases (PPL). The cost of rehabilitation and internal rate of return must be calculated to determine if improvements are justified.

4.3 Integrated Improvements

The periodic field test results should be used to update the unit operating characteristics and limits. Optimally, these would be integrated into an automatic system (e.g., Automatic Generation Control), but if not, hard copies of the data should be made available to all involved personnel (particularly unit operators), their importance to be emphasized, and their ability to be understood and confirmed. Justified projects to constantly monitor unit performance should be implemented.

5.0 Information Sources

Baseline Knowledge:

1. Electric Power Research Institute (EPRI), *Increased Efficiency of Hydroelectric Power*, EM-2407, June 1982
2. United States Army Corps of Engineers (USACE), *Wolf Creek Dam Seepage Rehabilitation Project*, Retrieved from http://www.lrn. usace.army.mil/wolfcreek/, Page last updated on April 19, 2011
3. Tennessee Valley Authority (TVA), *Managing River System Flows*, Retrieved from http://www.tva.gov/river/lakeinfo/systemwide.htm
4. EPRI, *Hydropower Technology Roundup Report: Flow Measurement at Hydro Facilities: Achieving Efficiency, Compliance, and Optimal Operation*, TR-113584-V5, January 2002
5. USACE, *Seepage*, Retrieved from http://www.lrn.usace.army.mil/centerhill/pdf/ seepage.pdf
6. TVA, *Great Falls Hydro Plant - Dam Safety Instrumentation Project Performance Report*, EDMS J22060427001, 2005
7. *Hydro Life Extension Modernization Guides: Volume 1 – Overall Processes*, EPRI, Palo Alto, CA: 1999. TR-112350-V1.

State of the Art

8. *Top 5 Developments in Hydro*, International Water Power and Dam Construction, January 26, 2011
9. *Diagnosing Dam Seepage*, International Water Power and Dam Construction, March 21, 2011
10. Montgomery, J. R., M. L. Jessop, M. J. Wallace, and V. O. Kofoed, *Using Controlled Source Audio Frequency Domain Magnetics for Seepage Diagnosis of Earthen Embankments*, SAGEEP 22, 785, March 2009
11. Opsahl, E., and Ø. Krøvel, *Installing the Turbinator*, International Water Power and Dam Construction, December 22, 2010
12. Hydro Green Energy, LLC, *Full Operations Initiated at Nation's First Commercial Hydrokinetic Power Station*, Retrieved from http://www.hgenergy.com/ moellerrelease.pdf

Standards:

13. USACE, S*eepage Analysis and Control for Dams*, EM 1110-2-1901, April 30, 1993
14. USACE, *Engineering and Design - Planning and Design of Navigation Dams*, EM 1110-2-2607, July 31, 1995
15. American Society of Civil Engineers, Civil Works for Hydroelectric Facilities: *Guidelines for Life Extension and Upgrade*, 2007

It should be noted by the user that this document is intended only as a guide. Statements are of a general nature and therefore do not take into account special situations that can differ significantly from those discussed in this document.

Best Practice Catalog

Francis Turbine

HAP
HYDROPOWER
ADVANCEMENT PROJECT

Revision 2.0, 07/18/2012

1.0 Scope and Purpose

This best practice for a Francis turbine addresses its technology, condition assessment, operations, and maintenance best practices with the objective to maximize its performance and reliability. The primary purpose of the turbine is to function as the prime mover providing direct horsepower to the generator. It is the most significant system in a hydro unit. How the turbine is designed, operated, and maintained provides the most impact to the efficiency, performance, and reliability of a hydro unit.

1.1 Hydropower Taxonomy Position

Hydropower Facility → Powerhouse → Power Train Equipment → Turbine → Francis Turbine

1.1.1 Francis Turbine Components

Performance and reliability related components of a Francis turbine consist of a spiral case, stay ring/stay vanes, wicket gates, reaction type runner, vacuum breaker, aeration device, and draft tube.

Spiral Case: The function of the spiral case (or scroll case) is to supply water from the penstock to the stay vanes while maintaining near uniform water velocity around the stay vanes and wicket gates as achieved by its unique shape and continual cross sectional area reduction.

Stay Ring/Vanes: The function of the stay vanes (and stay ring) is to align the flow of water from the spiral case to the wicket gates. They also usually function as support columns in vertical units for the static weight of the unit's stationary components and hydraulic thrust during turbine operation.

Wicket Gates: The function of the wicket gates is primarily to control the quantity of water entering the turbine runner, thereby controlling power output. Secondarily, the gates control the angle of the high tangential velocity water striking the runner bucket surface. The optimum angle of attack will be at peak efficiency. The wicket gates also function as a closure valve to minimize leakage through the turbine while it is shutdown. Leakage can also originate from water passing by the end seals on the gates between the top end of the gates and head cover and the bottom end of the gates and bottom ring.

Runner: The function of the runner is to convert the potential energy of pressure (head) and flow of water into mechanical energy or rotational horsepower which is supplied directly to the turbine shaft. There are various types of designs such as horizontal or vertical orientations, single discharge, double discharge, and overhung designs. The most prevalent type is a vertical unit.

Vacuum Breaker: The function of the vacuum breaker is to admit air to a zone near the turbine runner [2]. It is usually an automatic device either spring loaded or cam operated off the wicket gate shifting ring. For reaction turbines it is used for drawing in atmospheric

air at low gate openings, such as synchronizing and speed no load, to reduce vibration and rough operation. While this reduces rough operation, it also reduces turbine efficiency by introducing vacuum and air vortices beneath the runner.

Aeration Device: The function of an aeration device is for the inlet of air into the turbine to provide for an increase in dissolved oxygen in the tailrace waterway for environmental enhancements. The device can be either active or passive in design with the passive designs being more common. An active design would include some type of motorized blower or compressor to force air into the turbine for mixing with water in the turbine and/or draft tube. A passive design would consist of some type of addition or modification to a turbine runner to naturally draw in atmospheric air into the turbine. This in its most basic form is done through adding baffles to vacuum breaker air discharge ports in the crown or nose cone of the turbine runner and blocking the vacuum breaker open. The latest and most efficient method is an aerating turbine runner designed and built to discharge the air through internal porting in the runner and out the blade tips.

Draft Tube: The function of the draft tube is to gradually slow down the high discharge velocity water capturing the kinetic energy from the water, which is usually below atmospheric pressure. In most cases, it has an elbow in order to minimize excavation for the unit. The head recovery from the draft tube is the difference between the velocity head at the runner discharge and the draft tube discharge overall, increasing the head across the turbine. The larger the head differential is across the turbine, the higher the turbine power output. The draft tube should be steel lined from the discharge ring to the point where the water velocity reduces to about 20 ft/s, which is considered below concrete scouring velocity [1].

Non-performance but reliability related components of a Francis turbine include the wicket gate mechanism/servomotors, head cover, bottom ring, turbine shaft, guide bearing, and mechanical seals/packing.

Wicket Gate Mechanism/Servomotors: The function of the wicket gate mechanism and servomotors is to control the opening and closing of the wicket gate assembly. The mechanism includes arms, linkages, pins, shear pins, turnbuckles or eccentric pins for closure adjustment, operating ring (or shift ring, and bearing pads), and bushings either greased bronze or greaseless type. Servomotors are usually hydraulically actuated using high pressure oil from the unit governor. In some limited cases a very small unit may have electro-mechanical servomotors.

Head Cover: The head cover is a pressurized structural member covering the turbine runner chamber that functions as a water barrier to seal the turbine. It also serves as a carrier for the upper wicket gate bushings, upper seal surface for the wicket gate vanes, support for the gate operating ring, carrier for the runner stationary seal rings, and support for the turbine guide bearing.

Bottom Ring: The bottom ring serves as a carrier for the bottom wicket gate bushings, bottom seal surface for the wicket gate vanes, and a carrier for the bottom runner stationary seal ring.

Turbine Shaft: The function of the turbine shaft is to transfer the torque from the turbine runner to the generator shaft and generator rotor. The shaft typically has a bearing journal for oil lubricated hydrodynamic guide bearings on the turbine runner end or wearing sleeve for water lubricated guide bearings. Shafts are usually manufactured from forged steel, but some of the largest shafts can be fabricated.

Guide Bearing: The function of the turbine guide bearing is to resist the mechanical imbalance and hydraulic side loads from the turbine runner thereby maintaining the turbine runner in its centered position in the runner seals. It is typically mounted as close as practical to the turbine runner and supported by the head cover. Turbine guide bearings are usually either oil lubricated hydrodynamic (babbitted) bearings or water lubricated (plastic, wood, or composite) bearings.

Mechanical seals/packing: Sealing components in the turbine include the seal for the turbine shaft and the wicket gate stem seals. Shaft seals are typically either packing boxes with square braided packing or for high speed units a mechanical seal is required. Wicket gate stem packing is usually either a square braided compression packing, a V type or Chevron packing, or some type of hydraulic elastomer seal. Although in the truest sense, any sealing components on a turbine could be a performance issue, since any leakage that by-passes the turbine runner is a loss of energy, the leakage into the wheel pit is considered insignificant to the overall flow through the turbine.

1.2 Summary of Best Practices

1.2.1 Performance/Efficiency & Capability - Oriented Best Practices

Performance levels for turbine designs can be stated at three levels as follows:

The Installed Performance Level (IPL) is described by the unit performance characteristics at the time of commissioning. These may be determined from reports and records of efficiency and/or model testing conducted prior to and during unit commissioning.

The Current Performance Level (CPL) is described by an accurate set of unit performance characteristics determined by unit efficiency testing, which requires the simultaneous measurement of flow, head, and power under a range of operating conditions, as specified in the standards referenced in this document.

Determination of the Potential Performance Level (PPL) typically requires reference to new turbine design information from manufacturer to establish the achievable unit performance characteristics of replacement turbine(s).

- Periodic testing to establish accurate current unit performance characteristics and limits.
- Dissemination of accurate unit performance characteristics to unit operators, local and remote control and decision support systems, and other personnel and offices that influence unit dispatch or generation performance.
- Real-time monitoring and periodic analysis of unit performance at CPL to detect and mitigate deviations from expected efficiency for the IPL due to degradation or instrument malfunction.
- Periodic comparison of the CPL to the PPL to trigger feasibility studies of major upgrades.
- Maintain documentation of IPL and update when modification to equipment is made (e.g., hydraulic profiling, draft tube slot fillers, unit upgrade).
- Trend loss of turbine performance due to condition degradation for such causes as metal loss (cavitation, erosion, and corrosion), opening of runner seal, opening of wicket gate clearances, and increasing water passage surface roughness. Adjust maintenance and capitalization programs to correct deficiencies.
- Include industry acknowledged "up to date" choices for turbine components materials and maintenance practices.

1.2.2 Reliability/Operations & Maintenance - Oriented Best Practices

- Use ASTM A487/A743 CA6NM stainless steel to manufacture Francis turbine runners, wicket gates, and water lubricated bearing shaft sleeves. This martensitic grade of stainless steel is a good compromise between its performance properties (resistance to wear, erosion and cavitation) versus the austenitic grade stainless steels (300 series) which carry an inhibitive higher cost. [19, 20]
- Bushing clearances greater than two times the design are considered excessive and warrants replacement.
- Wicket gate shear pins (mechanical fuse) are an engineered product designed to prevent failures of more costly components in the mechanism. When replacing pins or spare pins, it is best practice, to purchase the pin material from one manufacturer to ensure material properties remain consistent. Prototype sample pins are manufactured and tested to finalize the diameter for the final pin shop drawing.
- Turbine shaft areas near the shaft seal that are exposed to water should be sealed with a robust coating such as an epoxy paint to prevent corrosion of the shaft.
- Damage from erosion and cavitation on component wetted surfaces are repaired using 309L stainless steel welding electrodes. This austenitic grade stainless steel enables the avoidance to post heat treatment of repaired components and increases damage resistance.

- When turbine runner seal clearances reach twice the design value, one should consider rehabilitating or replacing the runner due to efficiency loss.
- Francis turbines with heads above 100 feet should be considered candidates for embedded wicket gate vane end seals and wicket gates fabricated from stainless steel to mitigate leakage and wear.
- Adequate coating of the turbine wetted components not only prevents corrosion but has added benefits of improved performance.
- Vacuum breakers should be inspected routinely and adjusted for optimal performance.
- Discharge areas on a turbine runner for aeration devices should be clad with stainless steel to mitigate cavitation.
- Wicket gate mechanism linkage bushings should be of the greaseless type to reduce grease discharge to the wheel pit and ultimately the station sump. Use greaseless bushings in other applications if possible; however, care must be taken in any retrofit to ensure that the servomotors are strong enough to operate even after a 25% increase in long term friction.
- For applications above 200 feet of head, stainless steel wearing plates embedded into the head cover and bottom ring immediately above and below the wicket gate vanes are recommended.
- Kidney loop filtration should be installed on turbine guide bearing oil systems.
- Automatic strainers with internal backwash should be installed to supply uninterrupted supply of clean water to water lubricated turbine guide bearings.
- Monitor trends of decrease in condition of turbine (decrease in Condition Indicator (CI)), decrease in reliability (an increase in Equivalent Forced Outage Rate (EFOR), and a decrease in Effective Availability Factor (EAF)). Adjust maintenance and capitalization programs to correct deficiencies.

1.3 Best Practice Cross-references

- I&C – Automation
- Mechanical – Lubrication System
- Electrical – Generator
- Mechanical – Governor
- Mechanical – Raw Water System

2.0 Technology Design Summary

2.1 Material and Design Technology Evolution

Francis turbine runners are typically manufactured as one piece, either as a casting or as a welded fabrication. Very old runners, from the early 1900's or before, were cast from cast iron or bronze and later replaced with cast carbon steel. Today runners are either cast or fabricated from carbon steel or stainless steel. Just as materials have improved for modern turbine runners, so has the design and manufacturing to provide enhanced performance for power, efficiency, and reduced cavitation damage.

Best practices for the turbine begins with a superior design to maximize and establish the baseline performance while minimizing damage due to various factors, including cavitation, pitting, and rough operation. The advent of computerized design and manufacturing occurred in the late 1970's and 1980's and made many of the advancements of today possible. Modern Computational Fluid Dynamics (CFD) flow analysis, Finite Element Analysis techniques (FEA) for engineering, and Computer Numerically Controlled (CNC) in manufacturing have significantly improved turbine efficiency and production accuracy.

2.2 State of the Art Technology

Turbine efficiency is likely the most important factor in an assessment to determine rehabilitation or replacement. Such testing may show CPL has degraded significantly from IPL. Figure 1 is an example of the peak efficiency of a Francis unit with a percentage point drop in peak efficiency of greater than 3 in a 35 year period since it went into commercial operation. Regardless of whether performance has degraded or not, newer turbine designs are usually more efficient than those designed 30 to 40 years ago. Also, a new turbine can be designed using actual historical operations rather than original design data providing a turbine more accurately suited for the site.

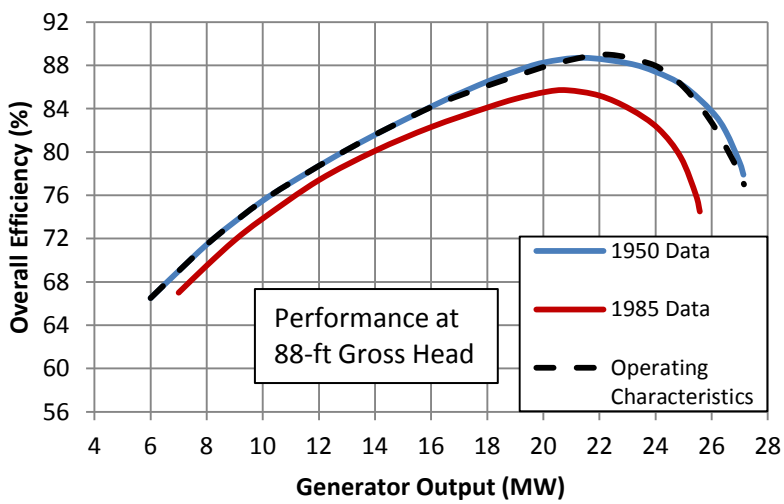

Figure 1: Example - Original vs. Degraded Performance Curves [8]

Newer state of the art turbine designs can not only achieve the PPL but also provide decreased cavitation damage based on better hydraulic design and materials [3]. Figures 2 and 3 show an original runner and its state of the art stainless steel replacement runner, as a comparison. Figure 6 shows a state of the art aerating runner which discharges the air from the bucket tips.

Figure 2: Original Runner

Figure 3: New Stainless Steel Replacement Runner

3.0 Operation and Maintenance Practices

3.1 Condition Assessment

After the commercial operation begins, how the turbine is operated and maintained will have a huge impact on loss prevention of the IPL and CPL and maintaining reliability. Materials for turbine runners are usually cast iron, steel, or stainless steel. As a best practice, the most common material being used today for new state of the art runners is ASTM A487/A743 CA6NM stainless steel [19, 20]. It is cavitation resistant, fairly easy to cast and fabricate, and can usually be weld repaired without post heat treatment. The same is true for wicket gate materials.

The other wetted turbine components such as stay vanes, spiral cases, and draft tubes are usually constructed from steel due to strength requirements. Some components have stainless steel cladding overlaid in critical areas. The most significant contributor to performance loss for all wetted components is any metal loss due to cavitation, as shown in Figure 4, abrasive erosion, surface finish degradation, and the poor quality of past repairs which can distort the hydraulic design contours of components.

Condition assessment of those flow components must address any past damage, location of damage, repeat damage, and resulting increase in surface roughness. Evaluating the overall condition of a turbine and all its components may show that a new state of the art turbine runner with enhanced power and efficiency may provide sufficient benefits to justify its replacement, including rehabilitating related components, as compared to maintaining current turbine with existing efficiency [3].

Figure 4: Typical Cavitation Damage to Runner Blade

The vacuum breaker or air inlet valve is usually mounted directly to turbine head cover and will probably require disassembly for a thorough condition assessment. A condition assessment

would include observing operation of the vacuum breaker during startup. Loose operation or banging of the seals would indicate a misadjusted or worn device requiring maintenance. Unit performance can also be checked with the valve opened, closed, and in normal operating position to measure and contrast any difference in unit performance that would indicate a problem with the valve.

Aeration devices for the turbine can take the form of more complex active systems, such as motorized blowers, to the less complex passive systems, such as baffles and self aspirating runner designs. The passive designs are the most common practice, as shown in Figures 5 and 6.

Focusing on the most common designs, the condition assessment would include inspections of the air discharge passages in the turbine and any observable cavitation or erosion damage that might affect its normal operation. A decrease of normal dissolve oxygen uptake in the waterway downstream could be an indicator of degradation of the condition of the aeration device.

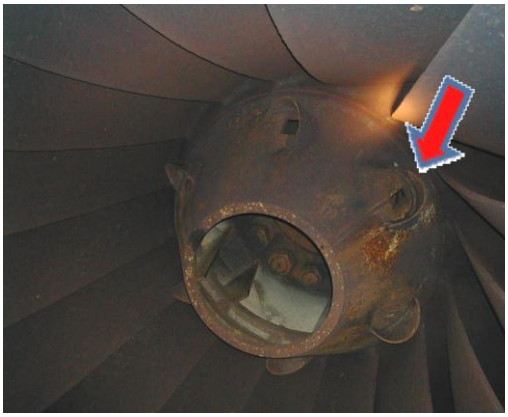

Figure 5: Aeration Baffles on Nose Cone

Figure 6: Aerating Runner (through bucket tips)

The wicket gate mechanism (Figure 7) and the actuating servomotors provide for the regulation and control of the turbine. The condition assessment of the components would include measurements of wear or looseness in the arms, linkages, pins, shear pins, turnbuckles (or eccentric pins), linkage bushings, operating ring (and bearing pads), and wicket gate stem bushings. It is important to note that excessive wear in the components is additive and can result in losing off-line regulating control of the wicket gates making it more difficult to synchronize the unit. This is an indication that rehabilitation of the components is necessary. Measurement of wear is difficult without disassembly; however, extreme wear can be observed as loss of motion in gate movements.

In some turbine designs it is possible during dewatered outages, to measure the clearance between the wicket gate stem journals and the inside diameter of the bushings with feeler gauges. Abnormal water leakage around the wicket gates in the turbine wheel pit after an

attempt to adjust the stem packing is an indicator of excessive wicket gate stem bushing wear. As a best practice, bushing to journal clearance greater than two times the design is considered excessive. An increase in the number of shear pin failures over a given period is an indication of either a problem with the design and material used to manufacture the pins or a problem with binding in the mechanism.

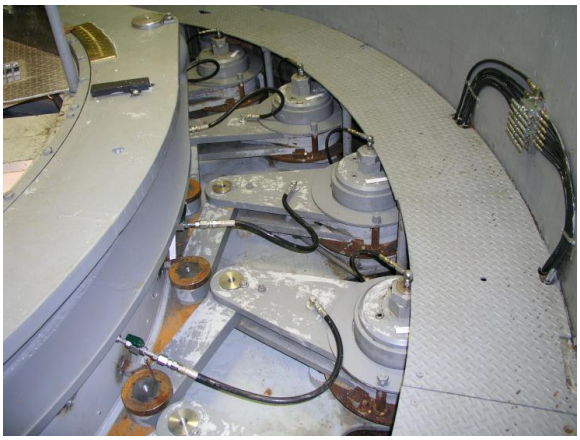

Figure 7: Wicket Gate Mechanism

Hydraulic servomotors (Figure 8) are usually very reliable, with the most common problem being oil leakage from the seal on the actuating rod. The amount of acceptable leakage is dependent on the seal design and site maintenance requirements. Hydraulic seals will leak very little whereas a square braided compression packing will leak more. A condition assessment would include observation of the leakage and discussion with the plant maintenance technicians as to the amount of daily or weekly maintenance required. Excessive maintenance would require the change of the seal or packing. It is important to note and observe if the actuating rod is smooth and without any scoring or grooves which would prevent sealing. If the rod is damaged it will require repair or replacement.

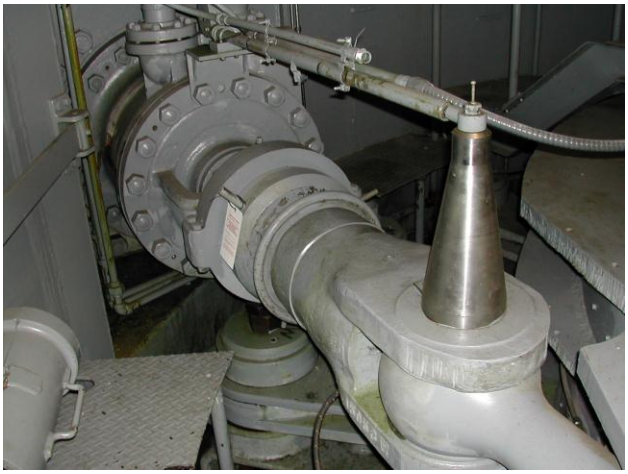

Figure 8: Wicket Gate Servomotor

The condition assessment of the head cover and bottom ring consists mainly of visually inspecting the wetted surfaces for erosion and cavitation. Cracking in either component or deep erosion in the water barrier of the head cover is a major concern and must be addressed immediately. Excessive corrosion of the joint bolting (stay ring flange or split joints) or failure of the bolting is a major concern and must be addressed immediately. The assessment would also include observation of any galling between the ends of the wicket gate vanes, the head cover, bottom ring and damage to embedded end seals.

The condition assessment of the turbine shaft (Figure 9) would include observation of corrosion and defects on the exposed surface. Any cracking as identified by the Nondestructive Examination (NDE) methods is a major concern and must be addressed immediately.

Bearing journals and sleeves must be smooth and free of defects (only accessible with bearing removed) to ensure the reliability of the turbine guide bearing. As a best practice for water lubrication turbine bearings, wearing sleeves are usually manufactured from ASTM A487/A743 CA6NM stainless steel either as a forging or centrifugally cast [19, 20]. Areas near the shaft seal that are exposed to water should be sealed with a robust coating such as an epoxy paint to prevent corrosion of the shaft.

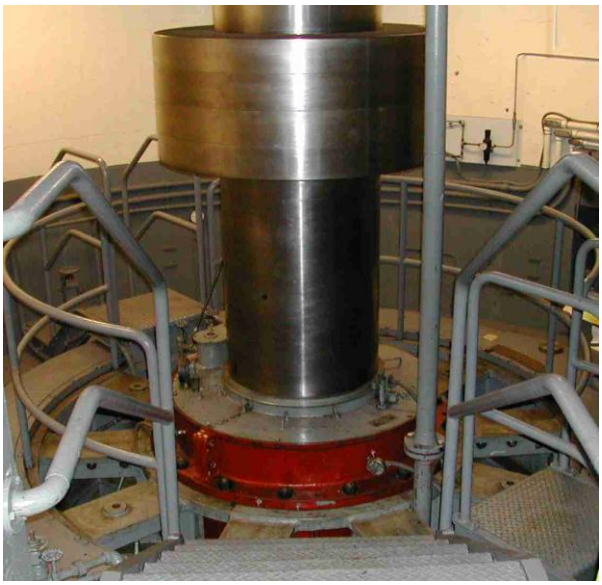

Figure 9: Turbine Shaft / Wheel Pit

Turbine guide bearings are usually either oil lubricated hydrodynamic bearings (Figure 10) or water lubricated bearings (Figure 11), with the latter being found only in low head slow speed units. The condition assessment of the oil lubricated type includes vibration measurements (i.e. shaft throw) and temperature of the bearing in operation. Abnormal indications of those could be a sign of failure of the babbitted surface (wipe), un-bonding of the babbitt from the bearing housing, or contamination of the oil. The condition assessment of a water lubricated type centers mainly on vibration measurements and success of subsequent bearing adjustments if the design permits. An indication of a loose wearing sleeve on the shaft is excessive shaft throw (vibration) even after adjusting the bearing. Non-adjustable water lubricated bearings, or bearings worn beyond adjustment will require the wearing liner (either wood, plastic, or composite) to be replaced.

Figure 10: Babbitted Oil Journal Bearing

Figure 11: Water Lubricated Bearing

The condition assessment of the wicket gate stem seals or shaft seals usually includes the observation of excessive water leakage in the turbine wheel pit area which can be viewed visually or estimated by sump pump operation (if available). Excessive leakage, even after adjustments (if possible by design), is an indication that the seals or packing must be replaced.

3.2 Operations

Since Francis turbines have a very narrow operating range for peak efficiency (Figure 12), it is extremely important for plant operations to have an accurate operating curve for the units. The curves originate from the manufacturer's model test data and post installation performance testing. The performance of the turbine can degrade over time due to cavitation and/or erosion damage and resulting weld repairs, etc. Therefore to maximize unit efficiency, periodic performance testing either as absolute or relative testing must be carried out to update operational performance curves. An example of relative testing would be index testing (using Winter Kennedy taps).

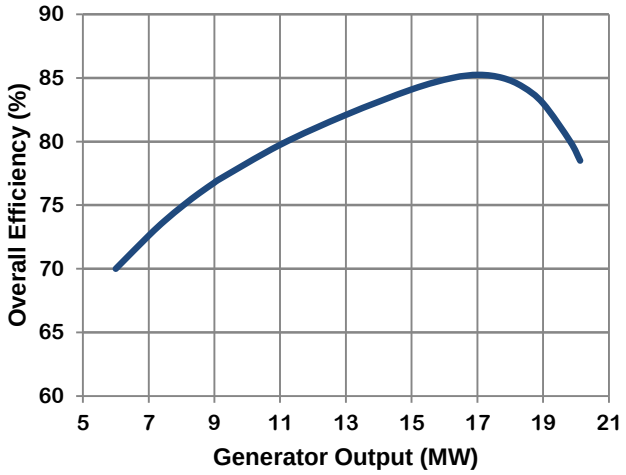

Figure 12: Typical Francis Performance Curve

"Frequent index testing, especially before and after major maintenance activities on a turbine, should be made to detect changes in turbine performance at an early stage and establish controls [9]." Plants should, as best practice, perform periodic performance testing (such as index testing according to PTC 18 [14]) to assure the most accurate operating curves are available to optimize plant output. Routinely, this should be done on a 10 year cycle as a minimum.

3.3 Maintenance

It is commonly accepted that turbines normally suffer from a progressive deterioration in performance over time (in default of restorative action) [4]. Usual causes include cavitation damage, abrasive erosion wear, galvanic corrosion, impact damage from debris passing through,

and errors in welding repairs to original runner blade profile and surface finish. Performance related maintenance techniques involve mainly those weld repairs for cavitation damage, abrasive erosion damage, and galvanic corrosion on the turbine components such as the runner, wicket gates, stay vane, spiral case and draft tube. The usual best practice is to perform cladding with a 309L stainless steel welding electrode to provide some cavitation resistance. In some cases, original blade contour templates are available at the plant to facilitate returning the blade back to Original Equipment Manufacturer (OEM) specifications. A good reference for turbine maintenance is the USBR's FIST Volume 2-5, *Turbine Repair* [6] and *Hydro Wheels: A Guide to Maintaining and Improving Hydro Units* [14].

Francis turbine runners usually have replaceable seal rings or wear rings on the outside diameter of the crown and band or provisions for adding such in the future. It is essential to maintain adequate sealing to prevent excessive hydraulic thrust loads on the generator thrust bearing (bearing carrying the unit's axial load, i.e., static weight plus hydraulic thrust) and prevent excessive water leakage by-passing the runner.

The generator thrust bearing is designed to handle hydraulic loads from the seals worn to twice the design value [1]. Therefore, as a best practice, when runner seal clearances reach twice the design value, one should consider rehabilitating or replacing the runner. Seal ring clearances are usually measured with feeler gauges during routine maintenance and documented for trending over time. For high head units, leakage by these seal rings may affect the overall efficiency of the turbine by 1 to 3% [5].

Worn wicket gate end clearances can also contribute to a decline in unit performance since leakage contributes to power generation loss, particularly by those units with a low service factor (i.e., gates in closed position for a significant period of time). In a new unit, the leakage through properly designed wicket gates may be markedly less than 1% of full gate discharge; however, over years of operation this could be doubled due to eroded end clearances, worn stem journal bushings, and improperly adjusted toe to heel closures [5]. As a best practice, turbines with heads above 100 feet should be considered as candidates for embedded wicket gate vane end seals and wicket gates fabricated from stainless steel to mitigate leakage and wear.

Investigations by the US Army Corps of Engineers (USACE) show minor modifications to the stay vane - wicket gate system which could result in an operation efficiency increases of 0.5 to 0.7% for the units studied [11]. As shown in reference [11], the modification takes the form of profile change on the stay vane leading and trailing edges modifying the wake relative to the wicket gate. These changes have to be studied in a Computational Fluid Dynamics (CFD) model and/or physical model. In addition, such modifications can reduce fish injury as one environmental benefit.

In some cases, Von Karman vortices can trail off the wicket gates during high flow operation, impinging on the runner band and blades with resulting cavitation damage. Flow profile modifications, including a narrowing of the lower trailing edges (as shown in Figure 13) of the wicket gates, can reduce the formation of vortices, and thus allow higher flow rates and power output. The exact profile change should be designed based on CFD and/or physical modeling.

Figure 13: Wicket Gate Modification

Further studies by the USACE to improve turbine efficiency have found some relationship between surface roughness of the turbine components, and degradation of the unit performance [10]. It is commonly known that surface roughness on flow surfaces robs a moving fluid of energy; similar to what is found in piping systems. A higher relative roughness will increase the friction loss usually expressed in the head.

Since the power generated by a turbine is directly related to head, logically, any loss in head by frictional losses of the water flowing through the turbine will be a loss in performance. Improvements in surface finish include grinding and coating (painting) the surfaces. In some cases, the USACE tests found efficiency improvements of 0.1 to 0.8% comparing pre-coated versus post-coating performance [10]. However, the level of uncertainty of field testing measurement can range up to 1%, which makes it difficult to quantify results within testing error. Common maintenance best practice of providing adequate coating of the turbine components to prevent surface corrosion does have added benefits of improved performance, however unquantifiable.

By design, a vacuum breaker introduces atmospheric air into the sub-atmospheric area below the runner reducing the pressure across the runner, thereby reducing efficiency. The vacuum breaker should be able to work at the smallest possible gate setting to avoid vibration and rough operation, but not admit air at the higher operating gate settings. Best practice for the vacuum breaker includes periodic maintenance (during routine inspections) to assure proper operation and evaluation of the condition of the main seals to prevent leakage. It is important that any stroke dampening devices built into the vacuum breaker be checked and adjusted annually to avoid excessive cycling (banging) of the seal during operation. The vacuum breaker, being a mechanical device subject to frictional wear, will require major maintenance (overhauling) based on number of cycles of operation, but typically every 10 to 20 years.

Maintenance of any aeration device on the turbine includes periodic inspection (during routine inspections) and testing of components to ensure the device is operating according to design. Areas adjacent to the air discharge in the turbine must be monitored for damage due to erosion or cavitation. As a best practice, those areas if not stainless steel already should be clad with stainless steel to mitigate damage.

Pressures in the draft tube increase as the water flows from the elbow to the exit. If the top of the draft tube gate slots (close to the elbow) is submerged (under tail water), water can be drawn down into the draft tube due to the lower pressure there, increasing the total flow in the draft tube from that point to the exit, thereby increasing the head loss and reducing the unit efficiency. The closer the gate slot is to the centerline of the unit, the greater the effect. The use of slot fillers to plug the upper openings of the gate slots have been shown to remedy this problem and in some cases improving efficiency by as much as 1%.

The wicket gate mechanism consists of arms, linkages, pins, shear pins, turnbuckles (or eccentric pins), linkage bushings, operating ring (and bearing pads), and wicket gate stem bushings. For greased bushing designs, it is essential that the greasing system is functioning to original specification with metered grease flowing to all points. It is important to grease the wicket gate stem bushings and observe if the grease is entering the bushing clearance and visually discharging. If not, this will have to be repaired immediately.

Greaseless bushing designs require less routine maintenance than the greased designs; however, the most common maintenance issue is broken or loose anti-rotation devices on the pins. The greaseless bushings will wear at a more rapid rate than the greased bushings, requiring replacements more frequently, such as on a 10 to 20 year cycle in contrast to a 30 to 40 year cycle for greased bushings.

As a best practice, the bushings on the wicket gate linkages are usually the greaseless type in order to reduce the amount of grease discharging into the wheel pit area and ultimately flowing into the powerhouse sump. Bushing applications in other turbine areas, such as wicket gate stem bushings, operating ring pads, and servomotors, are usually chosen based on the owner's preference when comparing bushing life and reliability versus the owner's desire to minimize the use of grease lubrication. However, it is important that each greaseless bushing is designed correctly for the application.

In some cases the friction in greaseless bushings increases over time due to trapped wear debris and incursion of silt and debris from the water, as compared to the greased bushings which are flushed by the movement of the grease. An increase in long term operating friction in greaseless applications, means the wicket gate servomotors must be over designed (particularly in retrofits) with excess capacity of at least 25% in order to ensure reliable operation [12].

Major maintenance of the wicket gate mechanism includes replacement of the pins, pads, bushings, and true machining of wear surfaces. This will be required every 10 to 40 years depending on the design and operating conditions. Shear pins (mechanical fuse) are an engineered product designed to prevent failures of more costly components in the mechanism. It

is best practice to purchase the pin material from one manufacturer to ensure material properties remain constant. Prototype sample pins are manufactured and then broken in a test stand to determine actual shear properties. This test data is used to finalize the shear area diameter for the final pin shop drawing.

Routine maintenance of wicket gate servomotors is minimal and usually only requires changing of the actuating rod seals or packing when leakage become excessive. Major maintenance includes an overhaul of the servomotor, requiring disassembly, and replacement of bushings, seals, and piston rings.

Head cover and bottom ring routine maintenance is usually to ensure that the protective coating on the wetted surfaces is intact and any erosion or cavitation is repaired before it progressively worsens. Any galling damage at or near the ends of the wicket gate vanes must be removed by grinding to prevent further galling or damage to the wicket gate vane end seals. For higher head units with heads above 200 feet and/or poor water quality units, it is best practice to embed stainless steel wearing plates in the head cover and bottom ring immediately above and below the wicket gate vane ends to mitigate erosion and cavitation damage.

It is also common to install wicket gate vane end seals (either elastomer or bronze) into these areas to minimize leakage. Unfortunately, it is also best practice to manufacture wicket gates from stainless steel. Since stainless steel in contact with stainless steel can experience a high degree of galling, it is imperative that the design of wicket gate up thrust device be robust to resist the axial movement of the gate and prevent these surfaces from contacting. Wicket gate up thrust is generated either by the hydraulic pressure of water under the bottom stem and/or grease application pressure. Major maintenance of the head cover and bottom ring includes blasting and Nondestructive Examination (NDE) for cracking inspection, recoating, replacing wear plates and runner stationary seal rings, and replacing wicket gate bushings.

Routine turbine shaft maintenance consists of minimizing the corrosion of the shaft surface with a light coat of oil in the non-water contact areas and periodic re-coating of areas that come in contact with water with a robust paint such as epoxy. Major maintenance includes refurbishment on bearing journals, replacement of wearing sleeve, and re-truing coupling faces during a major unit overhaul.

Turbine guide bearings are usually either oil lubricated hydrodynamic bearings or water lubricated bearings. Maintenance of an oil lubricated bearing and its reliability are directly connected to the quality of the supplied oil used for lubrication and cooling. Any contamination of the oil either with debris or water will increase the likelihood of a bearing failure. A best practice is to install a kidney loop filtration system capable of continuously removing debris and water from the bearing oil supply. Maintenance of a water lubricated bearing and its reliability are also directly connected to the quality of the supplied water used for lubrication and cooling. Although in this case, with the viscosity of the water being so low, the water functions more as a coolant than as a lubricant. A best practice is to

install an automatic strainer with internal backwash for uninterrupted supply of clean water to the bearing without need of routine maintenance to change or clean the filters. An uninterrupted supply is essential since any loss of water flow during turbine operation will quickly overheat the anti-friction contact surface of the internal liner (plastic, wood, or composite) of the bearing resulting in a rapid failure.

Since water lubricated bearings inherently wear which results in an increase in shaft vibration (shaft throw), periodic maintenance is required to adjust the bearing to tighten the running clearance. Some poorly designed bearings are non-adjustable and require the internal lining to be replaced to tighten clearances. Extreme shaft vibration (shaft throw) can cause contact of the turbine runner's seal rings, resulting in wear and the possible failure of the seal rings and extended unit outage. Major maintenance of either bearing type requires the refurbishment of the bearings, such as re-babbitting of an oil bearing or re-lining the water lubricated bearing. In addition, for water lubricated bearing, the shaft wearing sleeve may have to be machined true or replaced.

Sealing components in the turbine include the wicket gate stem seals and the seal for the turbine shaft. Routine maintenance will vary according to the type of seal and the operating conditions. Generally the hydraulic type seals, such as PolyPak seals, on wicket gate stems are maintenance free, however, like o-ring seals, once they leak there are no adjustments and must be replaced. Adjustable seal designs, such as with packing, can be tightened to reduce the leakage. Excessive leakage, even after adjustment, is an indication that the seals or packing must be replaced.

Seals for the turbine shaft vary from simple packing in a packing box around the shaft to higher speed applications with mechanical seals. It is important to note that a certain amount of leakage is required in a turbine shaft seal for cooling the seal (or packing), therefore zero leakage is not the objective. Routine maintenance includes replacement of the packing in the packing box or replacement of the composite (sacrificial) wearing component in the mechanical seal. Major maintenance of all the applications consists of the routine maintenance replacements and additional replacement of any opposing hard face wear elements such as wear sleeves for packing and hard face wear elements for the mechanical seals.

4.0 Metrics, Monitoring and Analysis

4.1 Measures of Performance, Condition, and Reliability

The fundamental process for a hydro turbine is described by the efficiency equation, which is defined as the ratio of the power delivered by the turbine to the power of the water passing through the turbine.

The general expression for this efficiency (η): $\eta = \frac{P}{\rho g Q H}$ [15]

Where:
- **η** is the hydraulic efficiency of the turbine
- **P** is the mechanical power produced at the turbine shaft (MW)
- **ρ** is the density of water (1000 kg/m^3)
- **g** is the acceleration due to gravity (9.81 m/s^2)
- **Q** is the flow rate passing through the turbine (m^3/s)
- **H** is the effective pressure head across the turbine (m)

Turbine performance parameters for Francis units are defined in ASME PTC-18 [16] and IEC 60041 [17], and typically include the following: Generator Output, Turbine Discharge, Headwater and Tailwater Elevations, Inlet Head, Discharge Head, Gate Position, and Water Temperature.

Typical vibration measurements may include: shaft displacement (x and y) at turbine and generator bearings, and headcover and thrust bridge displacements (z). Acoustic emission (on the draft tube access door or liner) may be measured to track relative cavitation noise.

The condition of the Francis turbine can be monitored by the Condition Indicator (CI) as defined according to HAP Condition Assessment Manual [13].

Unit reliability characteristics, as judged by its availability for generation, can be monitored by use of the North American Electric Reliability Corporation's (NERC) performance indicators, such Equivalent Availability Factor (EAF) and Equivalent Forced Outage Factor (EFOR). These are used universally by the power industry. Many utilities supply data to the Generating Availability Data System (GADS) maintained by NERC. This database of operating information is used for improving the performance of electric generating equipment. It can be used to support equipment reliability and availability analysis and decision-making by GADS data users.

4.2 Data Analysis

Analysis of test data is defined in ASME PTC-18 [16] and IEC 60041 [17]. Basically, determine unit efficiency and available power output relative to turbine discharge, head, gate opening position, and determine operating limits based on vibration and acoustic emission measurements (CPL). Compare results to previous or original unit test data (IPL), and determine efficiency, capacity, annual energy, and revenue loss. Compare results to new unit design data (from turbine

manufacturer), and determine potential efficiency, capacity, annual energy, and revenue gain (PPL). For the latter, calculate the installation/rehabilitation cost and internal rate of return to determine upgrade justification. Separately, determine the justification of draft tube profile modification using turbine manufacturer's data.

Trend runner seal clearances (top and bottom) relative to OEM design values. If rehabilitation is required (resulting in complete unit disassembly), consider the value of installing new design unit.

Trend wicket gate end clearances (top and bottom) and toe to heel closures relative to OEM design values. If rehabilitation is required (resulting in complete unit disassembly), consider the value of installing new design unit. If the turbine does not already have wicket gate end seals (either spring loaded bronze or elastomer), analytically determine the annual energy and revenue gain associated with their use. Calculate the implementation cost and internal rate of return.

Monitor the operation of vacuum breaker based on routine maintenance program and performance testing. Consider rehabilitating the vacuum breaker if it is leaking.

Analytically or using field test data, determine the efficiency, annual energy, and revenue gain associated with the use of draft tube gate slot fillers. Calculate the implementation cost and internal rate of return.

The condition assessment of a Francis turbine is quantified through the CI as derived according to HAP Condition Assessment Manual [13]. The overall CI is a composite of the CI derived from each component of the turbine. This methodology can be applied periodically to derive a CI snapshot of the current turbine condition such that it can be monitored over time and studied to determine condition trends that can impact performance and reliability.

The reliability of a unit as judged by its availability to generate can be monitored through reliability indexes or performance indicators as derived according to NERC's Appendix F, *Performance Indexes and Equations* [18].

4.3 Integrated Improvements

The periodic field test results should be used to update the unit operating characteristics and limits. Optimally, these would be integrated into an automatic system (e.g., Automatic Generation Control), but if not, hard copies of the curves and limits should be made available to all involved personnel (particularly unit operators) and their importance emphasized.

Justified projects (hydraulic re-profiling, slot fillers, unit upgrade) and a method to constantly monitor unit performance should be implemented.

As the condition of the turbine changes, the CI and reliability indexes are trended and analyzed. Using this data, projects can be ranked and justified in the maintenance and capital programs to bring the turbine back to an acceptable condition and performance level.

5.0 Information Sources:

Baseline Knowledge:

1. Thomas C. Elliott, *Standard Handbook of Powerplant Engineering*, McGraw Hill Publishing, 1989
2. NEMA *Standard for Hydraulic Turbines and Governors*, Pub. No. HT1-1949
3. US Corps of Engineers, *Hydro Plant Risk Assessment Guide*, September 2006
4. EPRI, *Increased Efficiency of Hydroelectric Power*, EM 2407, June 1992
5. *Hydroelectric Handbook*, William P. Creager, John Wiley & Sons, 1950
6. USBR, FIST Volume 2-5, *Turbine Repair*, September 2000
7. *Hydro Life Extension Modernization Guide, Volume 2: Hydromechanical Equipment,* EPRI, Palo Alto, CA: 2000. TR-112350-V2.

State of the Art

8. March, P.A. and Wolff, P.J., Component Indicators for an Optimization-Based Hydro Performance Indicator: HydroVision 2004, Montreal, Quebec, Canada, August 2004.
9. Brice, T.A. and Kirkland, J.E., Checking Turbine Performance by Index Testing, Hydro Review, Vol. V, No. V, Winter, 1986
10. USACE, Turbine Surface Roughness Improvement, HDC-P, December, 2003
11. USACE, Stay Vane and Wicket Gate Relationship Study, CENWP- HDC-P, January 19, 2005
12. J.C. Jones, Wicket Gates – Grease vs. Greaseless, USBR O&M Workshop, April 10, 2001
13. ORNL, HAP Condition Assessment Manual
14. Spicher, T., Hydro Wheels: A Guide to Maintaining and Improving Hydro Units, HCI Publications, 3rd Edition 2004
15. Cateni, A., Margri, L., Grego, G.: Optimization of Hydro Power Plants Performance importance of Rehabilitation and Maintenance in Particular for Runner – 2008

Standards:

16. ASME 2011, Hydraulic Turbines and Pump-Turbines, PTC 18-2011
17. IEC, 1991, Field Acceptance Tests to Determine the Hydraulic Performance of Hydraulic Turbines, Storage Pumps and Pump-Turbines, IEC-60041
18. NERC, Appendix F, Performance Indexes and Equations, January, 2011
19. ASTM A487, Standard Specification for Steel Castings Suitable for Pressure Service
20. ASTM A743, Standard Specification for Castings, Iron-Chromium, Iron-Chromium-Nickel, Corrosion Resistant, for General Application

It should be noted by the user that this document is intended only as a guide. Statements are of a general nature and therefore do not take into account special situations that can differ significantly from those discussed in this document.

Best Practice Catalog

Propeller/Kaplan Turbine

Revision 2.0, 07/19/2012

1.0 Scope and Purpose

This best practice for a Propeller/Kaplan turbine addresses its technology, condition assessment, operations, and maintenance best practices with the objective to maximize its performance and reliability. The primary purpose of the turbine is to function as the prime mover providing direct horsepower to the generator. It is the most significant system in a hydro unit. How the turbine is designed, operated, and maintained provides the most impact to the efficiency, performance, and reliability of a hydro unit. The Propeller/Kaplan type turbine is typically used in a low head and high flow application. Fixed-blade propeller types have a very narrow range of high efficiency operation, while adjustable-blade types can operate at high efficiency over a wide flow and power output range.

1.1 Hydropower Taxonomy Position

Hydropower Facility → Powerhouse → Power Train Equipment → Turbine → Propeller/Kaplan Turbine

1.1.1 Propeller/Kaplan Turbine Components

Performance and reliability related components of a Propeller/Kaplan turbine consist of a reaction type axial-flow runner with adjustable-blade mechanism, wicket gates and controlling mechanism, spiral case, stay ring/stay vanes, and draft tube.

Spiral Case: The function of the spiral case (or scroll case) is to supply water from the intake to the stay vanes directly to the upstream portion of the turbine while maintaining near uniform water velocity around the stay vanes and wicket gates as achieved by its unique shape and continual cross sectional area reduction to the downstream portion of the turbine.

Stay Ring/Vanes: The function of the stay vanes (and stay ring) is to align the flow of water from the spiral casing to the wicket gates. They also function as support columns in vertical units for supporting the static weight of the unit's stationary components and hydraulic thrust during turbine operation.

Wicket Gates: The function of the wicket gates is primarily to control the quantity of water entering the turbine runner, thereby controlling power output. Secondarily, the gates control the angle of the high tangential velocity water striking the runner blades. The optimum angle of attack will be at peak efficiency. In an adjustable-blade unit, the tilt of the blades and opening of the gates are synchronized to maximize efficiency over as much of the operating range as possible. The wicket gates also function as a closure valve to minimize leakage through the turbine while it is shutdown.

Runner: The function of the runner is to convert the potential energy of pressure (head) and flow of water into mechanical energy or rotational horsepower. The Kaplan runner is comprised of a hub, nosecone, blades, and an internal blade tilting mechanism - typically a

hydraulically-driven piston with linkage and seals. Oil pressure is provided by the governor hydraulic system.

Draft Tube: The function of the draft tube, which is initially conically shaped and attached to the turbine discharge, is to gradually slow down the high discharge velocity water, capturing kinetic energy from the water, which is usually below atmospheric pressure. In most cases, it has an elbow in order to minimize excavation for the unit. The head recovery from the draft tube is the difference between the velocity head at the runner discharge and draft tube discharge, overall increasing the head across the turbine. The larger the head differential is across the turbine, the higher the turbine power output. The throat ring of the draft tube should be steel lined from the discharge ring to the point where the water velocity reduces to about 20 ft/s, which is considered below concrete scouring velocity [1].

Non-performance but reliability related components of a Propeller/Kaplan turbine include the wicket gate mechanism/servomotors, head cover, bottom ring, turbine shaft, guide bearing, mechanical seals/packing and discharge/throat ring.

Wicket Gate Mechanism/Servomotors: The function of the wicket gate mechanism and servomotors is to control the opening and closing of the wicket gate assembly. The mechanism includes arms, linkages, pins, shear pins, turnbuckles or eccentric pins for closure adjustment, operating ring (or shift ring, and bearing pads), and bushings either greased bronze or greaseless type. Servomotors are usually hydraulically actuated using high pressure oil from the unit governor. In some limited cases a very small unit may have electro-mechanical servomotors.

Turbine Shaft: The function of the turbine shaft is to transfer the torque from the turbine runner to the generator shaft and generator rotor. The shaft typically has a bearing journal for oil lubricated hydrodynamic guide bearings on the turbine runner end or wearing sleeve for water lubricated guide bearings. Shafts are usually manufactured from forged steel, but some of the largest shafts can be fabricated.

Guide Bearing: The function of the turbine guide bearing is to resist the mechanical imbalance and hydraulic side loads from the turbine runner thereby maintaining the turbine runner in its centered position in the runner seals. It is typically mounted as close as practical to the turbine runner and supported by the head cover. Turbine guide bearings are usually either oil lubricated hydrodynamic (babbitted) bearings or water lubricated (plastic, wood, or composite) bearings.

Mechanical Seals/Packing: Water retaining sealing components in the turbine includes the seal for the turbine shaft and the wicket gate stem seals. Shaft seals are typically either packing boxes with square braided packing or for high speed units a mechanical seal is required. Wicket gate stem packing is usually either a square braided compression packing, a V type or Chevron packing, or some type of hydraulic elastomer seal. Although in the truest sense any sealing components on a turbine could be a performance issue, since any

leakage that by-passes the turbine runner is a loss of energy, the leakage into the wheel pit is considered insignificant to the overall flow through the turbine.

Oil filled Kaplan hubs have seals around the blade trunnions to prevent oil leakage and to prevent water leakage into the oil. These trunnions seals are usually either double opposing or chevron packing type.

Head Cover/Bottom Ring: The head cover is a pressurized structural member covering the turbine runner chamber that functions as a water barrier to seal the turbine. It also serves as a carrier for the upper wicket gate bushings, upper seal surface for the wicket gate vanes, support for the gate operating ring, carrier for the runner stationary seal rings, and support for the turbine guide bearing. The bottom ring serves as a carrier for the bottom wicket gate bushings, bottom seal surface for the wicket gate vanes, and a carrier for the bottom runner stationary seal ring.

Discharge/Throat Ring: The discharge ring serves as the steel housing of the runner which is the transitional piece to the expanding draft tube.

1.2 Summary of Best Practices

1.2.1 Performance/Efficiency & Capability - Oriented Best Practices

Performance levels for turbine designs can be stated at three levels as follows:

The Installed Performance Level (IPL) is described by the unit performance characteristics at the time of commissioning. These may be determined from reports and records of efficiency and/or model testing conducted prior to and during unit commissioning.

The Current Performance Level (CPL) is described by an accurate set of unit performance characteristics determined by unit efficiency testing, which requires the simultaneous measurement of flow, head, and power under a range of operating conditions, as specified in the standards referenced in this document.

Determination of the Potential Performance Level (PPL) typically requires reference to new turbine design information from manufacturers to establish the achievable unit performance characteristics of replacement turbine(s).

- Periodic testing to establish accurate current unit performance characteristics and limits.
- Dissemination of accurate unit performance characteristics to unit operators, local and remote control and decision support systems, and other personnel and offices that influence unit dispatch or generation performance.
- Real-time monitoring and periodic analysis of unit performance at CPL to detect and mitigate deviations from expected efficiency for the IPL due to degradation or instrument malfunction.

- Periodic comparison of the CPL to the PPL to trigger feasibility studies of major upgrades.
- Maintain documentation of IPL and update when modification to equipment is made (e.g., hydraulic profiling, slot fillers, unit upgrade).
- Trend loss of turbine performance due to condition degradation for such causes of metal loss (cavitation, erosion and corrosion), opening of runner seal and wicket gate clearances, increasing water passage surface roughness.
- Adjust maintenance and capitalization programs to correct deficiencies.
- Include industry acknowledged "up-to-date" choices for turbine components materials and maintenance practices to plant engineering standards.

1.2.2 Reliability/Operations & Maintenance - Oriented Best Practices

- Use ASTM A487/A743 CA6NM stainless steel to manufacture Propeller/Kaplan turbine runners, wicket gates, and water lubricated bearing shaft sleeves. This martensitic grade of stainless steel is a good compromise between its performance properties (resistance to wear, erosion and cavitation) versus the austenitic grade stainless steels (300 series) which carry an inhibitive higher cost. [18, 19].
- Bushing clearances greater than two times the design are considered excessive and warrants replacement.
- Wicket gate shear pins (mechanical fuse) are an engineered product designed to prevent failures of more costly components in the mechanism. When replacing pins or spares pins, it is best practice, to purchase the pin material from one manufacturer to ensure material properties remain consistent. Prototype sample pins are manufactured and tested to finalize the diameter for the final pin shop drawing.
- Turbine shaft areas near the shaft seal that are exposed to water should be sealed with a robust coating such as an epoxy paint to prevent corrosion of the shaft.
- Damage from erosion and cavitation on component wetted surfaces are repaired using 309L stainless steel welding electrodes. This austenitic grade stainless steel enables the avoidance to post heat treatment of repaired component and increases damage resistance.
- Propeller/Kaplan turbines with heads above 100 feet should be considered as candidates for embedded wicket gate vane end seals and wicket gates fabricated from stainless steel to mitigate leakage and wear.
- Adequate coating of the turbine wetted components not only prevents corrosion but has added benefits of improved performance.
- Vacuum breakers should be inspected routinely and adjusted for optimal performance.
- Discharge areas on a turbine runner for aeration devices should be clad with stainless steel to mitigate cavitation.

- Wicket gate mechanism linkage bushings should be of the greaseless type to reduce grease discharge to the wheel pit and ultimately the station sump. Use greaseless bushings in other applications if possible; however, care must be taken in any retrofit to ensure that the servomotors are of sufficient strength to operate even after a 25% increase in long term friction.
- Kidney loop filtration should be installed on turbine guide bearing oil systems.
- Automatic strainers with internal backwash should be installed to supply uninterrupted supply of clean water to water lubricated turbine guide bearings.

1.3 Best Practice Cross-references

- I&C – Automation
- Mechanical – Lubrication System
- Electrical – Generator
- Mechanical – Governor
- Mechanical – Raw Water System

2.0 Technology Design Summary

2.1 Material and Design Technology Evolution

Propeller/Kaplan turbine blades and internal parts are typically cast; whereas the hub and nose cone are either cast or rolled and welded. Very old runners, from the early 1900's or before, were cast from cast iron or bronze and later replaced with cast carbon steel. Today's casting would involve casting or fabrication from carbon steel or stainless steel. As a best practice, the most common material used for the blades is ASTM A487/A743 CA6NM stainless steel [18, 19]. It is cavitation-resistant, fairly easy to cast and fabricate, and can usually be weld-repaired without post heat treatment.

A best practice for the turbine begins with a superior design to maximize and establish the baseline performance while minimizing damage due to various factors, including cavitation, pitting, and rough operation. The advent of computerized design and manufacturing occurred in the late 1970's and 1980's and made many of today's advancements possible. Modern Computational Fluid Dynamics (CFD) flow analysis, Finite Element Analysis techniques (FEA) for engineering, and Computer Numerically Controlled (CNC) in manufacturing have significantly improved turbine efficiency and production accuracy.

2.2 State of the Art Technology

Turbine efficiency is likely the most important factor in a condition assessment to determine rehabilitation or replacement. Testing may show performance has degraded significantly. For example the efficiency of a Kaplan unit has experienced steady degradation amounting to a total of 4 percentage points over a 19 year period (Figure 1).

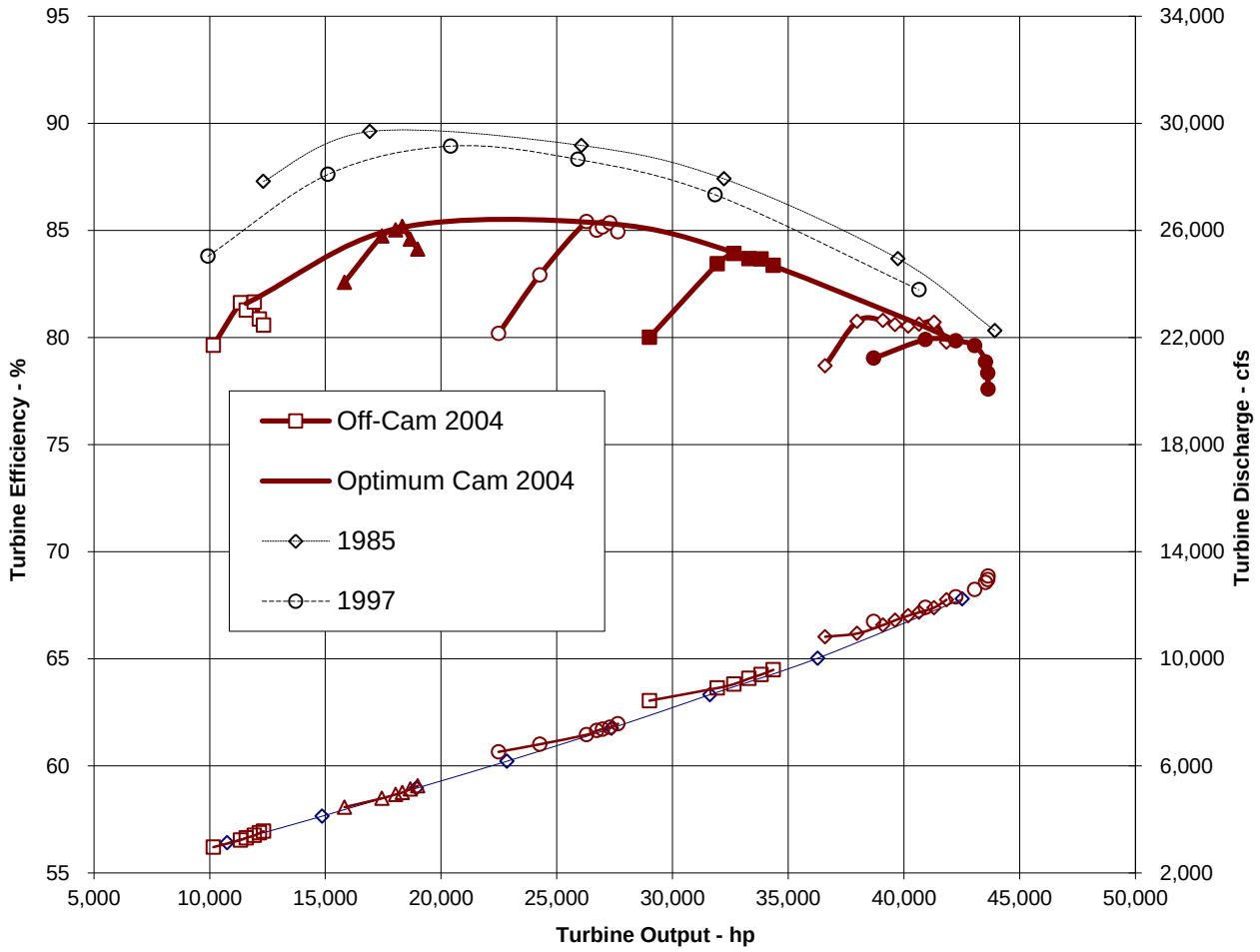

Figure 1: Kaplan Performance Degradation

Regardless of whether performance has degraded or not, newer turbine designs are usually more efficient than those designed 30 to 40 years ago. Also, a new turbine can be designed using actual historical data rather than original design data providing a turbine more accurately suited for the site. Newer turbine designs also provide decreased cavitation based on better hydraulic design and materials [2]. For comparison, Figures 2 and 3 show an original runner and its stainless steel replacement runner.

Figure 2: Original Runner

Figure 3: New Stainless Replacement Runner

3.0 Operational & Maintenance Best Practices

3.1 Condition Assessment

After commercial operation begins, how the turbine is operated and maintained will have a huge impact on loss prevention of the IPL and CPL and maintaining reliability.

Materials for turbine runners are usually cast iron, steel, or stainless steel. As a best practice, the most common material being used today for new state of the art runners is ASTM A487/ A743 CA6NM stainless steel [18, 19]. It is cavitation resistant, fairly easy to cast and fabricate, and can usually be weld repaired without post heat treatment.

The same is true for wicket gate materials. The hub and nose cone are usually carbon steel, but should have strategically-located stainless steel overlay. The other wetted components such as distributor rings, including stay vanes, are typically constructed from steel due to strength requirements and some with stainless steel cladding overlaid in critical areas.

Spiral cases and draft tubes are usually left as poured concrete except for the high velocity throat ring area. A significant contributor to performance loss in these wetted components is any surface degradation due to cavitation, abrasive erosion, surface finish degradation, and the poor quality of past repairs. Typical locations are shown in Figure 4. These deteriorating factors can distort the hydraulic design contours of components. Condition assessment of those flow components must address all past damage, location of damage, repeat damage, and resulting increase in surface roughness. The same is true for wicket gate materials.

The other wetted turbine components such as stay vanes, spiral cases, and draft tubes are usually constructed from steel due to strength requirements. Some components have stainless steel cladding overlaid in critical areas. The most significant contributor to performance loss for all wetted components is any metal loss due to cavitation, as shown in Figure 4, abrasive erosion, surface finish degradation, and the poor quality of past repairs which can distort the hydraulic design contours of components.

Condition assessment of those flow components must address any past damage, location of damage, repeat damage, and resulting increase in surface roughness.

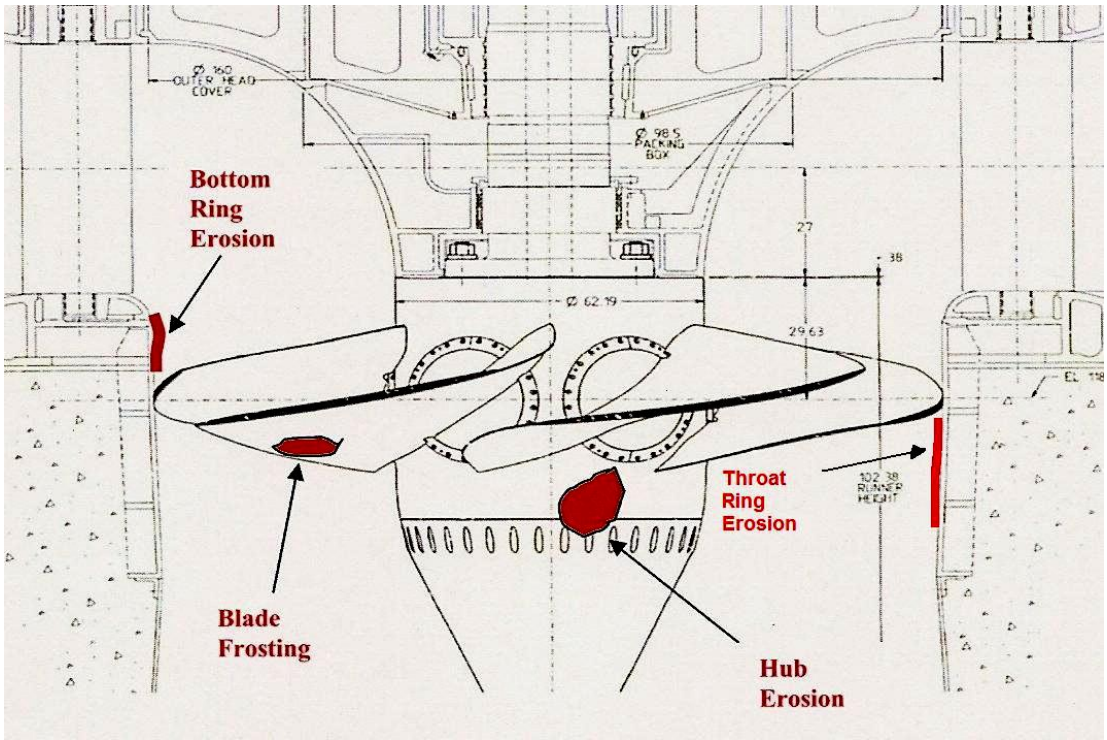

Figure 4: Typical Areas to Check for Cavitation Damage

A certain amount of cavitation is inherent in a Kaplan runner, primarily due to gaps between the blade inner periphery and hub and between the blade outer periphery and throat ring. Most runners manufactured since the 1980's include an "anti-cavitation fin" (located on a portion of the suction side of the blade outer periphery) to serve as a sacrificial element (Figure 5). Periodic inspection of this fin and of the throat ring may assist in identification of excessive operation beyond recommended cavitation limits in an effort to take advantage of the excessive flow and/or head which are otherwise wasted.

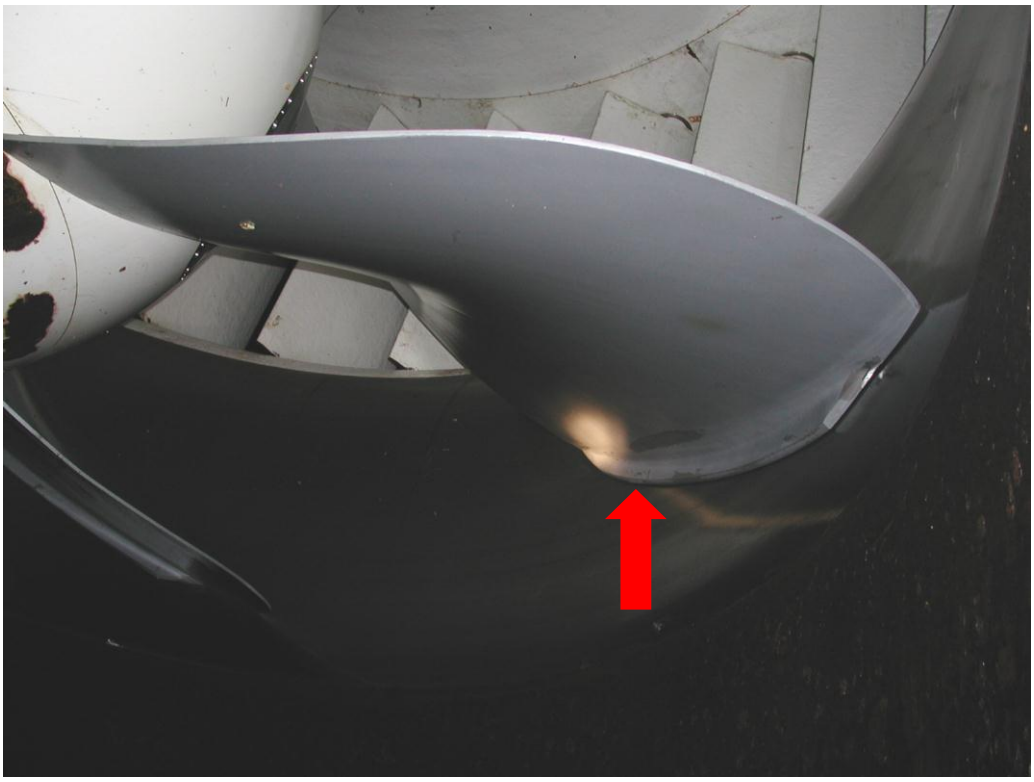

Figure 5: Anti-Cavitation Fin & Throat Ring Overlay

A comparison of the blade tip clearances to original installation measurements will provide an indication of the condition of the mechanism (bushings/bearings) securing the blade trunnions. Increased play in the securing mechanism of the trunnions can result in sagging blade tips which essentially creates a modified hydraulic profile from that designed, and consequent reduction in performance.

Drifting of the blade position over time and excessive oil usage may indicate the need to replace piston rings or other oil seals in the system. Maintaining blade position is paramount for optimizing performance. A periodic check should be made of the blade position on the hub versus the indicated position outside the unit, since original manufacturer's data (usually model) is often required to develop the optimum gate-blade relationship over the full head range.

Evaluating the condition of a turbine and its components may show that a new, state of the art designed runner with enhanced power and efficiency may provide sufficient benefits to justify its replacement, including rehabilitating related components, as compared to maintaining the current turbine with its existing efficiency [2].

The wicket gate mechanism (Figure 6) and the actuating servomotors provide for the regulation and control of the turbine. The condition assessment of the components would include measurements of wear or looseness in the arms, linkages, pins, shear pins, turnbuckles (or eccentric pins), linkage bushings, operating ring (and bearing pads), and wicket gate stem

bushings. It is important to note that excessive wear in the components is additive and can result in losing off-line regulating control of the wicket gates making it more difficult to synchronize the unit. This is an indicator that rehabilitation on the components is necessary. Measurement of wear is difficult without disassembly; however, extreme wear can be observed as loss of motion in gate movements.

In some turbine designs it is possible during dewatered outages, to measure the clearance between the wicket gate stem journals and the inside diameter of the bushings with feeler gauges. Abnormal water leakage around the wicket gates in the turbine wheel pit after an attempt to adjust the stem packing is an indicator of excessive wicket gate stem bushing wear. As a best practice, bushing to journal clearance greater than two times the design is considered excessive. An increase in the number of shear pin failures over a given period is an indication of either a problem with the design and material used to manufacture the pins or binding in the mechanism.

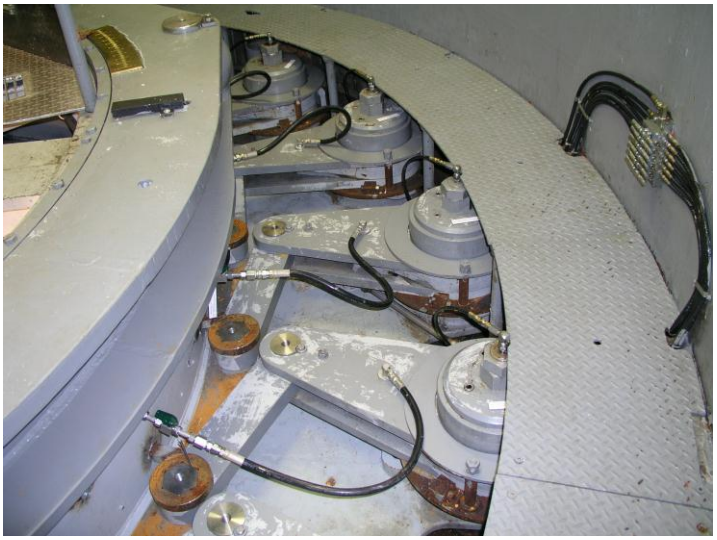

Figure 6: Wicket Gate Mechanism

Hydraulic servomotors (Figure 7) are usually very reliable, with the most common problem being oil leakage from the seal on the actuating rod. The amount of acceptable leakage is dependent on the seal design and site maintenance requirements. Hydraulic seals will leak very little whereas a square braided compression packing will leak more.

A condition assessment would include observation of the leakage and discussion with the plant maintenance technicians as to the amount of daily or weekly maintenance required. Excessive maintenance would require the change of the seal or packing. It is important to note and observe if the actuating rod is smooth, without any scoring or grooves which would prevent sealing. If the rod is damaged it will require repair or replacement.

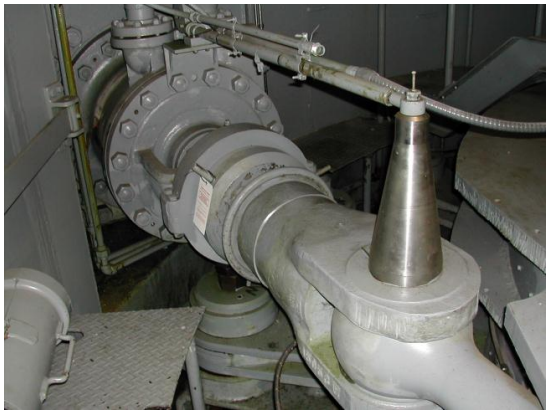

Figure 7: Wicket Gate Servomotor

The condition assessment of the head cover and bottom ring consists mainly of visually inspecting the wetted surfaces for erosion and cavitation. Cracking in either component or deep erosion in the water barrier of the head cover is a major concern and must be addressed immediately. Excessive corrosion of the joint bolting (stay ring flange or split joints) or failure of the bolting is a major concern and must be addressed immediately. The assessment would also include observation of any galling between the ends of the wicket gate vanes and the head cover and bottom ring and damage to embedded end seals.

The condition assessment of the turbine shaft (Figure 8) would include observation of corrosion and defects on the exposed surface. Any cracking as identified by the Nondestructive Examination (NDE) methods is a major concern and must be addressed immediately. Bearing journals and sleeves must be smooth and free of defects (only accessible with bearing removed) to ensure the reliability of the turbine guide bearing. As a best practice for water lubrication, turbine bearing wearing sleeves are usually manufactured from ASTM A743 CA6NM [17] stainless steel either forged or centrifugally cast. Areas near the shaft seal that are exposed to water should be sealed with a robust coating such as an epoxy paint to prevent corrosion of the shaft.

Figure 8: Turbine Shaft / Wheel Pit

Turbine guide bearings are usually either oil lubricated hydrodynamic bearings (Figure 9) or water lubricated bearings (Figure 10), with the latter being found only in low head slow speed units. The condition assessment of the oil lubricated type includes vibration measurements (i.e. shaft throw) and temperature of the bearing in operation. Abnormal indications of those could be a sign of failure of the babbitted surface (wipe), un-bonding of the babbitt from the bearing housing, or contamination of the oil.

The condition assessment of a water lubricated type centers mainly on vibration measurements and success of subsequent bearing adjustments (design permitting). An indication of a loose wearing sleeve on the shaft is excessive shaft throw (vibration) even after adjusting the bearing. Non-adjustable water lubricated bearings, or bearings worn beyond adjustment, will require the wearing liner (either wood, plastic, or composite) to be replaced.

Figure 9: Babbitted Oil Journal Bearing

Figure 10: Water Lubricated Bearing

The condition assessment of the wicket gate stem seals or shaft seals usually includes the observation of excessive water leakage in the turbine wheel pit area which can be viewed visually or estimated by sump pump operation (if available). Excessive leakage, even after adjustments (if possible by design), is an indication that the seals or packing must be replaced.

Either leakage of oil from the Kaplan blade trunnions seals or leakage of water into the Kaplan hub, oil leakage is an indicator of possible worn Kaplan blade trunnions bushings or bearings. Excessive wear in the blade trunnions bushings allow the blade to move further than the capability of the seal resulting in leakage during operation and long term wear of the seal.

3.2 Operations

Turbine performance can be maximized by utilizing operating characteristic curves and adhering to minimum and maximum output limits (such as vibration and cavitation). Adjustable blade units require the additional necessity of an accurate gate-blade relationship. Curves, limits, and gate-blade relationships should be generated from manufacturer's data and adjusted to field test data.

Operation will only be as good as this information is accurate. Plus, the performance of the turbine can degrade over time due to cavitation and/or erosion damage and resulting weld repairs, etc. Periodic performance checks, through absolute or relative (e.g., index) testing, are necessary for maintaining accuracy and must be made comprehensively at a number of operating heads. If a 2-dimensional (2D) cam is used in the governor for blade tilt control, it must be adjusted periodically to changing head conditions. If an electronic 3-dimensional (3D) cam is used, the database must be updated as needed, and the head inputs must checked against independent measurements particularly if the permanent measurement location can be affected by trash buildup.

Figure 11 shows typical performance curves for fixed and adjustable-blade units (from the same plant). The very narrow range of high efficiency in the fixed blade units must be defined accurately to optimize performance. In contrast, the adjustable-blade units offer a much wider range of high efficiency; however, the absolute peaks of the individual blade tilt efficiency curves (Figure 1) must be defined accurately in order to develop the optimum gate-blade relationships required to realize optimum performance.

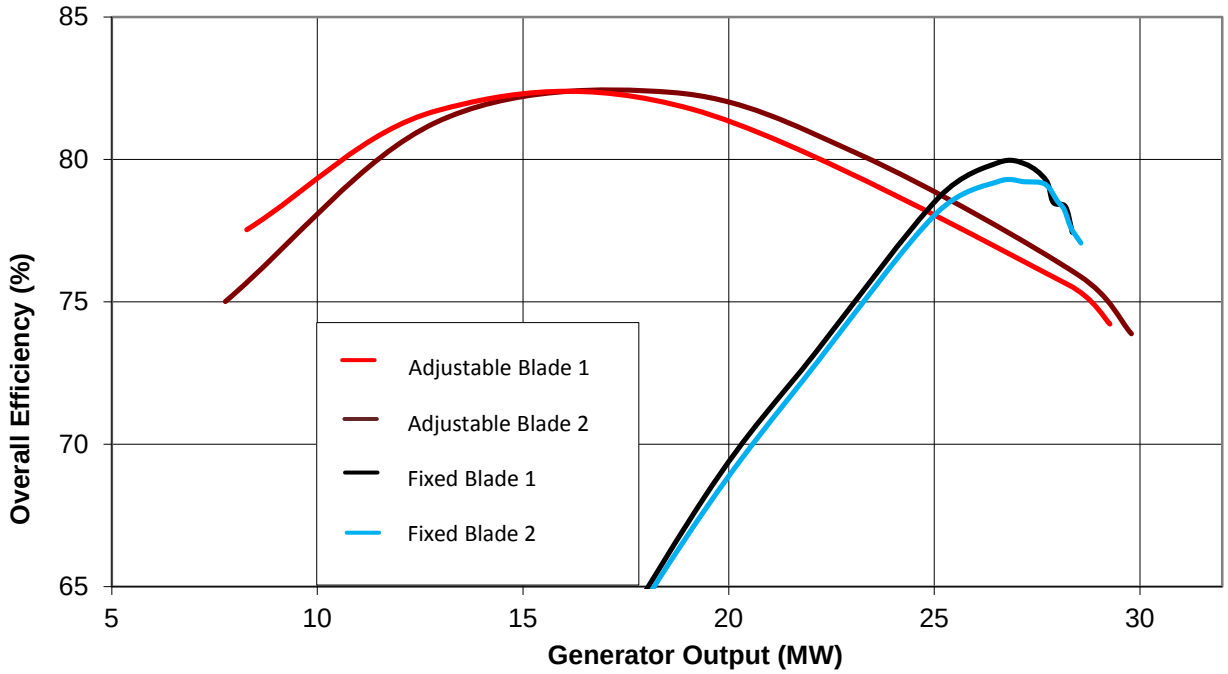

Figure 11: Typical Fixed and Adjustable-Blade Unit Efficiency Curves

Frequent index testing, especially before and after major maintenance activities on a turbine, should be made to detect changes in turbine performance at an early stage and establish controls [6]. Plants should, as a best practice, perform periodic performance testing (such as index testing according to PTC 18 [15]) to assure the most accurate operating curves are available to optimize plant output. This should be done on a 10 year cycle as a minimum.

Pressures in the draft tube increase as the water flows from the elbow to the exit. If the top of the draft tube gate slots are submerged (under tailwater), water can be drawn down into the draft tube due to the lower pressure increasing the total flow in the draft tube from that point to the exit. Therefore, increasing the head loss and reducing the unit efficiency. The closer the gate slot is to the centerline of the unit, the greater the effect. The use of slot fillers to plug the upper openings of the gate slots (Figure 12) have been shown to remedy this problem in one case by as much as 1% efficiency [8].

Figure 12: Draft Tube Gate Slot Fillers

3.3 Maintenance

It is commonly accepted that turbines normally suffer from a progressive deterioration in performance over time (in default of restorative action) [3]. Usual causes include cavitation damage, abrasive erosion wear, galvanic corrosion, striking damage from debris passing through, and errors in welding repairs to original blade profiles and surface finish. Performance-related maintenance techniques involve mainly those weld repairs to cavitation damage, abrasive erosion damage, and galvanic corrosion on the turbine components such as the runner, wicket gates, and distributor ring. A usual best practice is to perform cladding with a 309L stainless steel welding electrode to provide some cavitation resistance. In some cases, original blade contour templates are available at the plant to facilitate returning the blade inlet and trailing edges back to OEM specifications. A good reference for turbine maintenance is the USBR's FIST Volume 2-5, *Turbine Repair* [4] and Spicher's *Hydro Wheels* [14].

Typically, Kaplan runner blades are designed with stress relief grooves at the leading and trailing sides of the blade/trunnion intersection (Figure 13). These grooves, located to minimize the possibility of cracking in the high stress areas of the blade, create cavities in the flow profile which cause downstream disturbances in the form of low pressure vortices and can result in cavitation erosion on the hub and nose cone. It has been shown that fillers, attached to the blade or trunnion seal, have been effective in reducing the erosion, especially when paired with strategically-located stainless steel overlay on the hub and nose cone. Figure 14 shows a typical overlay area for a Kaplan runner hub/nose cone. Also, the spherical design of some newer runner hubs, as opposed to the traditional conical design, minimizes the gap between the blades and hub as the blades move to flatter positions (Figures 2 and 3).

Figure 13: Stress Relief Notch & Overlay

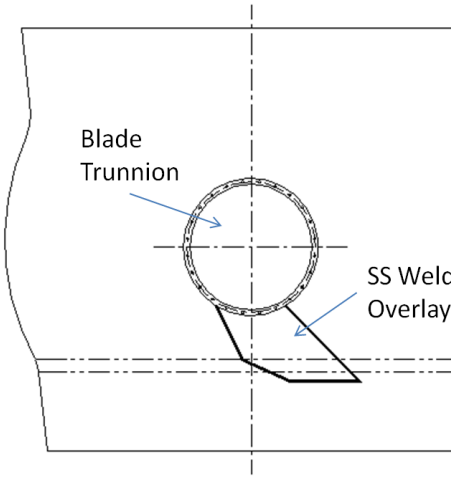

Figure 14: Typical Hub/Nose Cone Stainless Steel Overlay Location

Additional areas for stainless steel overlay include the throat ring to protect against "seal cavitation" at the blade periphery (Figure 5) and sections of the lower distributor ring and bottom ring where Von Karman vortices can trail off the wicket gates during high flow operation (Figure 15).

Flow profile modifications, a narrowing of the lower trailing edges of the wicket gates (Figure 16), can reduce vortices and allow higher flow rates and power output. The exact profile change should be designed based on Computational Fluid Dynamics (CFD) and/or physical modeling.

Figure 15: Bottom Ring Overlay

Figure 16: Modified Wicket Gate

Investigations by the US Army Corps of Engineers (USACE) show minor modifications to the stay vane/wicket gate system could result in an operation efficiency increase of 0.5 to 0.7% for units studied [9]. As shown in the reference, the modification takes the form of profile changes on the stay vane, leading and trailing edges, and modifying the wake relative to the wicket gate. The exact profile change should be designed based on CFD and/or physical modeling. In addition, such modifications can reduce fish injury as one environmental benefit.

Worn wicket gate end clearances can also contribute to a decline in unit performance since leakage contributes to power generation loss, particularly by those units with a low service factor (i.e., gates in closed position a significant period of time). In a new unit, the leakage through properly designed wicket gates may be markedly less than 1% of full gate discharge, however, over years of operation this could be doubled due to eroded end clearances, worn stem journal bushings, and improperly adjusted toe to heel closures.

The wicket gate mechanism consists of arms, linkages, pins, shear pins, turnbuckles (or eccentric pins), linkage bushings, operating ring (and bearing pads), and wicket gate stem bushings. For greased bushing designs it is essential that the greasing system is functioning to original specification with metered grease flowing to all points. It is important to grease the wicket gate stem bushings and observe if the grease is entering the bushing clearance and visually discharging. If not, this will have to be repaired immediately.

Greaseless bushing designs require less routine maintenance than the greased designs; however, the most common maintenance issue is broken or loose anti-rotation devices on the pins. The greaseless bushings will wear at a more rapid rate than the greased bushings, requiring replacements more frequently, such as on a 10 to 20 year cycle in contrast to a 30 to 40 year cycle for greased bushings.

As a best practice, the bushings on the wicket gate linkages are usually the greaseless type in order to reduce the amount of grease discharging into the wheel pit area and ultimately flowing into the powerhouse sump. Bushing applications in other turbine areas, such as wicket gate stem bushings, operating ring pads, and servomotors, are usually chosen based on the owner's preference when comparing bushing life and reliability versus the owner's desire to minimize the use of grease lubrication. However, it is important that each greaseless bushing is designed correctly for the application.

In some cases the friction in greaseless bushings increases over time due to trapped wear debris and incursion of silt and debris from the water, as compared to the greased bushings which are flushed by the movement of the grease. An increase in long term operating friction in greaseless applications means the wicket gate servomotors must be over designed (particularly in retrofits) with an excess capacity of at least 25% in order to ensure reliable operation [10].

Major maintenance of the wicket gate mechanism includes replacement of the pins, pads, bushings, and true machining of wear surfaces. This will be required every 10 to 40 years depending on the design and operating conditions. Shear pins (mechanical fuse) are an engineered product designed to prevent failures of more costly components in the mechanism. It

is a best practice to purchase the pin material from one manufacturer to ensure material properties remain constant. Prototype sample pins are manufactured and then broken in a test stand to determine actual shear properties. This test data is used to finalize the shear area diameter for the final pin shop drawing.

Routine maintenance of wicket gate servomotors is minimal and usually only requires changing of the actuating rod seals or packing when leakage become excessive. Major maintenance includes an overhaul of the servomotor requiring disassembly and replacement of bushings, seals, and piston rings.

Further studies by the USACE to improve turbine efficiency have found some relationship between surface roughness of the turbine components and degradation of the unit performance [11]. It is commonly known that surface roughness on flow surfaces robs a moving fluid of energy similar to what is found in piping systems. A higher relative roughness will increase the friction loss usually in the head pressure.

Since the power generated by a turbine is directly related to head, logically any loss in head by frictional losses of the water flowing through the turbine will be a loss in performance. Improvements in surface finish include grinding and coating (painting) the surfaces. In some cases, the USACE tests found efficiency improvements of 0.1 to 0.8% comparing pre-coated versus post-coating performance [11]. However, the level of uncertainty of field testing measurement can range up to 1%, which makes it difficult to quantify results within testing error. Common maintenance best practice of providing adequate coating of the turbine components to prevent surface corrosion does have added benefits of improved performance, however, unquantifiable.

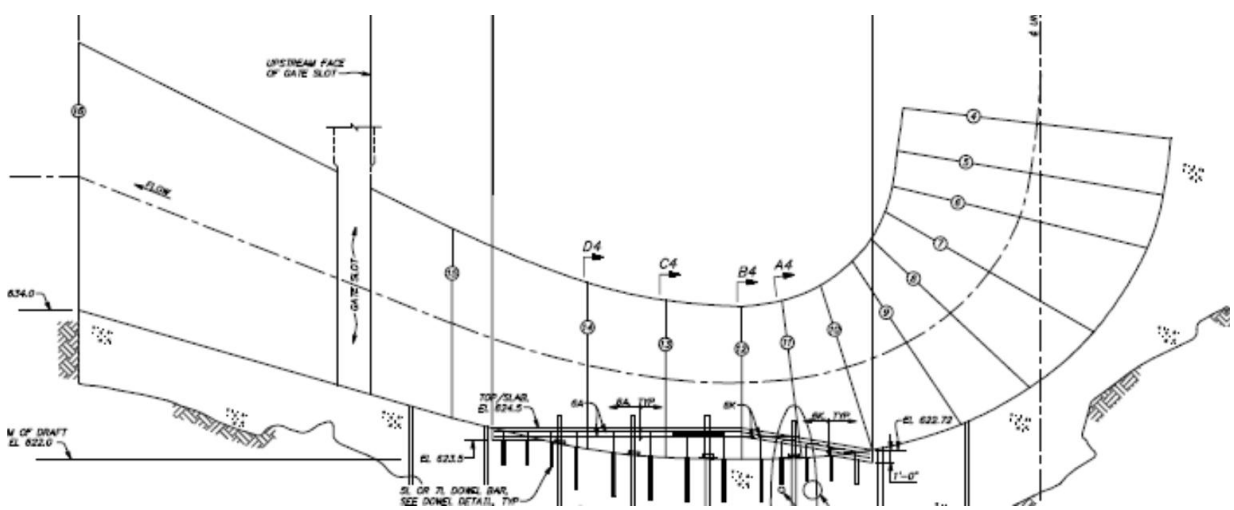

Figure 17: Draft Tube Modification

At certain head and flow rate combinations, flow separation can occur in the elbow section of some draft tubes resulting in unstable operation (stall). This is manifested in scattered data forming steep, peaky efficiency curves for individual blade tilts which make it difficult to determine and maintain an optimum gate-blade relationship. A reduction in the cross-sectional area of the elbow can reduce separation and be accomplished economically by strategically pouring concrete to raise the floor elevation (Figures 17 and 18).

Exact pour locations and depths should be determined using CFD and/or physical modeling. The result is more rounded efficiency curves so that if the gate-blade relationship changes, the operation will shift only slightly lower in efficiency instead of nose-diving. Additionally, model tests for one project showed efficiency and capacity gains of 0.11% and 535 hp.

Figure 18: Draft Tube Mod Pour

In general, any potential modifications to hydraulic profiles should be studied and verified with CFD and/or physical modeling by a competent turbine manufacturer or independent hydraulic laboratory. In the event of model testing for a turbine upgrade, the opportunity should be taken to investigate any modifications that hold performance improvement potential.

Head cover and bottom ring routine maintenance is usually to ensure that the protective coating on the wetted surfaces is intact and any erosion or cavitation is repaired before it progressively worsens. Any galling damage at or near the ends of the wicket gate vanes must be removed by grinding to prevent further galling or damage to the wicket gate vane end seals.

It is imperative that the design of the wicket gate up thrust device be robust and capable of resisting the axial movement of the gate and preventing the gate from contacting the headcover.

Wicket gate up thrust is generated either by the hydraulic pressure of water under the bottom stem and/or grease application pressure. Major maintenance of the head cover and bottom ring includes blasting and NDE for cracking inspection, recoating, replacing wear plates and runner stationary seal rings, and replacing wicket gate bushings.

Routine turbine shaft maintenance consists of minimizing the corrosion of the shaft surface with a light coat of oil in the non-water contact areas and periodic re-coating of areas that come in contact with water with a robust paint such as epoxy. Major maintenance includes refurbishment on bearing journals, replacement of wearing sleeve, and re-truing coupling faces during a major unit overhaul.

Turbine guide bearings are usually either oil lubricated hydrodynamic bearings or water lubricated bearings. Maintenance of an oil lubricated bearing and its reliability is directly connected to the quality of the supplied oil used for lubrication and cooling. Any contamination of the oil either with debris or water will increase the likelihood of a bearing failure. A best practice is to install a kidney loop filtration system capable of continuously removing debris and water from the bearing oil supply.

Maintenance of a water lubricated bearing and its reliability is also directly connected to the quality of the supplied water used for lubrication and cooling. Although in this case with the viscosity of the water being so low, the water functions more as a coolant than as a lubricant. A best practice is to install an automatic strainer with internal backwash for uninterrupted supply of clean water to the bearing without need of routine maintenance to change or clean the filters. An uninterrupted supply is essential since any loss of water flow during turbine operation will quickly overheat the anti-friction contact surface of the internal liner (plastic, wood, or composite) of the bearing resulting rapid failure.

Since water lubricated bearings inherently wear which results in an increase in shaft vibration (shaft throw), periodic maintenance is required to adjust the bearing to tighten the running clearance. Some poorly designed bearings are non-adjustable and require the internal lining to be replaced every time. Extreme shaft vibration can cause contact of the turbine runner's seal rings resulting in wear and the possible failure of the seal rings causing extended unit outage. Major maintenance of either bearing type requires the refurbishment of the bearings such as re-babbitting of an oil bearing or re-lining the water lubricated bearing. In addition, for the water lubricated bearing, the shaft wearing sleeve may have to be machined true or replaced.

Sealing components in the turbine include the wicket gate stem seals and the seal for the turbine shaft. Routine maintenance will vary according to the type of seal and the operating conditions. Generally, the hydraulic type seals, such as PolyPak seals, on wicket gate stems are maintenance free; however, with o-ring seals once they leak there are no adjustments and must be replaced. Adjustable seal designs, such as with packing, can be tightened to reduce the leakage. Excessive leakage even after adjustment is an indication that the seals or packing must be replaced.

Seals for the turbine shaft vary from simple packing in a packing box around the shaft to higher speed applications with mechanical seals. It is important to note that a certain amount of leakage

is required in a turbine shaft seal for cooling the seal (or packing); therefore, zero leakage is not the objective. Routine maintenance includes replacement of the packing in the packing box or replacement of the composite (sacrificial) wearing component in the mechanical seal. Major maintenance of all the applications consists of the routine maintenance replacements and additional replacement of and opposing hard face wear elements such as wear sleeves for packing and hard face wear elements for the mechanical seals.

Kaplan blade trunnions seals usually require replacing every 15 to 20 years. However, after 40 to 50 years the Kaplan blade trunnions bushing or bearings may be worn to the extent that seal replacements will not retain oil or water. At this point the Kaplan turbine will require refurbishment or replacement.

4.0 Metrics, Monitoring and Analysis

4.1 Measures of Performance, Condition, and Reliability

The fundamental process for a hydro turbine is described by the efficiency equation, defined as the ratio of the power delivered by the turbine to the power of the water passing through the turbine.

The general expression for this efficiency (η): $\eta = \frac{P}{\rho g Q H}$ [12]

Where:
- **η** is the hydraulic efficiency of the turbine
- **P** is the mechanical power produced at the turbine shaft (MW)
- **ρ** is the density of water (1000 kg/m^3)
- **g** is the acceleration due to gravity (9.81 m/s^2)
- **Q** is the flow rate passing through the turbine (m^3/s)
- **H** is the effective pressure head across the turbine (m)

Turbine performance parameters for Propeller/Kaplan units are defined in ASME PTC-18 [15] and IEC 60041 [16], and typically include the following: Generator Output, Turbine Discharge, Headwater and Tailwater Elevations, Inlet Head, Discharge Head, Gate Position, Blade position, and Water Temperature.

Typical vibration measurements may include: shaft displacement (x and y) at turbine and generator bearings, and headcover and thrust bridge displacements (z). Acoustic emission (on the draft tube man-door or liner) may be measured to track relative cavitation noise.

During unit outages: Blade tip clearances.

The condition of the Propeller/Kaplan turbine can be monitored by the Condition Indicator (CI) as defined according to HAP Condition Assessment Manual [12].

Unit reliability characteristics, as judged by its availability for generation, can be monitored by use of the North American Electric Reliability Corporation's (NERC) performance indicators such as Equivalent Availability Factor (EAF) and Equivalent Forced Outage Factor (EFOR). These are universally used by the power industry. Many utilities supply data to the Generating Availability Data System (GADS) maintained by NERC. This database of operating information is used for improving the performance of electric generating equipment. It can be used to support equipment reliability and availability analysis and decision-making by GADS data users.

4.2 Data Analysis

Analysis of test data is defined in ASME PTC-18 [15] and IEC 60041[16]. Basically, the analysis is used to determine unit efficiency and available power output relative to turbine discharge, head, gate opening, and blade tilt position. Determine operating limits based on vibration and acoustic emission measurements (CPL). Compare results to previous or original

unit test data (IPL), and determine efficiency, capacity, annual energy, and revenue loss. Compare results to new unit design data (from turbine manufacturer), and determine potential efficiency, capacity, annual energy, and revenue gain (PPL). For the latter, calculate the installation/rehab cost and internal rate of return to determine upgrade justification. Separately determine justification of any modifications (e.g., draft tube profile) using turbine manufacturer's data.

Determine the optimum gate-blade relationship. Compare the current 2D cam adjustment practice to a seasonal or periodic adjustment, and calculate the associated energy and revenue difference. Compare the current 2D cam adjustment practice to the continuous adjustment of a 3D cam and calculate the associated annual energy and revenue gain. For the latter, calculate the 3D cam installation cost and internal rate of return to determine upgrade justification.

Trend blade tip clearances relative to OEM design values. If rehab is required (resulting in complete unit disassembly), consider value of installing new design unit.

Analytically or using field test data, determine the efficiency, annual energy, and revenue gain associated with the use of draft tube gate slot fillers. Calculate the implementation cost and internal rate of return.

The condition assessment of a Propeller/Kaplan turbine is quantified through the Condition Indicator (CI) as derived according to HAP Condition Assessment Manual [13]. The overall CI is a composite of the CI derived from each component of the turbine. This methodology can be applied periodically to derive a CI snapshot of the current turbine condition such that it can be monitored over time and studied to determine condition trends.

The reliability of a unit as judged by its availability to generate can be monitored through reliability indexes or performance indicators as derived according to NERC's Appendix F, Performance Indexes and Equations, January 2011 [17].

4.3 Integrated Improvements

The periodic field test results should be used to update the unit operating characteristics and limits. Optimally, these would be integrated into an automatic system (e.g. Automatic Generation Control, AGC), but if not, hardcopies of the curves and limits should be made available to all involved personnel (particularly unit operators) and their importance emphasized.

If required, 2D cams should be replaced or re-profiled and 3D cam databases updated to reflect the test results. A table or set of curves showing the gate-blade relationship should be available to all involved personnel for periodic checking.

Justified projects (hydraulic profiling, slot fillers, unit upgrade) and a method to constantly monitor unit performance should be implemented.

As the condition of the turbine changes, the CI and reliability indexes are trended and analyzed. Using this data, projects can be ranked and justified in the maintenance and capital programs to bring the turbine back to an acceptable condition and performance level.

5.0 Information Sources

Baseline Knowledge:

1. Thomas C. Elliott, *Standard Handbook of Powerplant Engineering*, McGraw Hill Publishing, 1989.
2. US Army Corps of Engineers, *Hydro Plant Risk Assessment Guide*, September 2006.
3. EPRI, *Increased Efficiency of Hydroelectric Power*, EM 2407, June 1992.
4. USBR, FIST Volume 2-5, *Turbine Repair*, September 2000
5. *Hydro Life Extension Modernization Guide, Volume 2: Hydromechanical Equipment*, EPRI, Palo Alto, CA: 2000. TR-112350-V2.

State of the Art:

6. Brice T.A. and Kirkland J.E., *Checking Turbine Performance by Index Testing*, *Hydro Review*, Vol. V, No. V, Winter 1986.
7. March, P.A. and P.J. Wolff, *Component Indicators for an Optimization-Based Hydro Performance Indicator*, HydroVision 2004, Montreal, Quebec, Canada, August 2004.
8. TVA and Principia Research Corporation, *Hydroturbine Acceptance Tests for the Unit Replacement Runner at Ft. Patrick Henry Hydro Plant*, November, 1999.
9. USACE, *Stay Vane and Wicket Gate Relationship Study, CENWP- HDC-P, January 19, 2005.*
10. USACE, *Turbine Surface Roughness Improvement* HDC-P, December, 2003.
11. Jones, J.C. *Wicket Gates – Grease vs. Greaseless*, USBR O&M Workshop, April 10, 2001
12. Cateni, A., Margri, L., Grego, G.: *Optimization of Hydro Power Plants Performance importance of Rehabilitation and Maintenance in Particular for Runner* – 2008
13. ORNL, *HAP Condition Assessment Manual*
14. Spicher, T., *Hydro Wheels: A Guide to Maintaining and Improving Hydro Units*, HCI Publications, 3rd Edition 2004

Standards:

15. ASME PTC 18, *Hydraulic Turbines and Pump-Turbines, Performance Test codes* – 2002
16. IEC International standard 60041, *Field Acceptance Tests to Determine the Hydraulic Performance of Hydraulic Turbines, Storage Pumps and Pump-Turbines* - 1991 3rd Ed.
17. NERC, Appendix F, *Performance Indexes and Equations*, January, 2011
18. ASTM A487, *Standard Specification for Steel Castings Suitable for Pressure Service*
19. ASTM A743, *Standard Specification for Castings, Iron-Chromium, Iron-Chromium-Nickel, Corrosion Resistant, for General Application*

It should be noted by the user that this document is intended only as a guide. Statements are of a general nature and therefore do not take into account special situations that can differ significantly from those discussed in this document.

Best Practice Catalog

Pelton Turbine

HAP
HYDROPOWER
ADVANCEMENT PROJECT

Revision 2.0, 07/24/2012

1.0 Scope and Purpose

This best practice for a Pelton turbine addresses its technology, condition assessment, operations, and maintenance best practices with the objective to maximize its performance and reliability. The purpose of the turbine is to function as the prime mover providing direct horsepower to the generator. It is the most significant system in a hydro unit. How the turbine is designed, operated, and maintained provides the most significant impact on the efficiency and performance of a hydro unit.

1.1 Hydropower Taxonomy Position

Hydropower Facility → Powerhouse → Power Train Equipment → Turbine → Pelton Turbine

1.1.1 Pelton Turbine Components

Pelton turbines are impulse turbines used for high head (usually 100 to 1000 m or above) and low flow hydro applications. The Pelton runner normally operates in air or near atmospheric pressure with one to six jets of water impinging tangentially on the runner.

The Pelton turbine unit comes in two shaft axis arrangements: horizontal (Figure 1) and vertical (Figure 2). This is dictated by the overall hydro plant design. The horizontal shaft turbine (maximum of 4 jets) is more conducive for maintenance activities but requires a larger powerhouse. Alternatively, the vertical shaft turbine (maximum of 6 jets) is more difficult to perform maintenance but allows a narrower shape of the power station footprint [1].

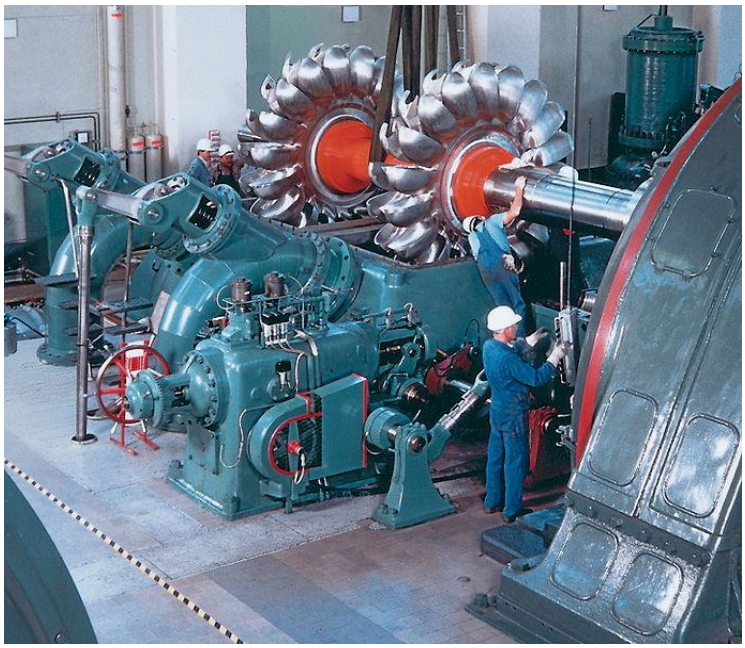

Figure 1: Twin runner horizontal Pelton turbine

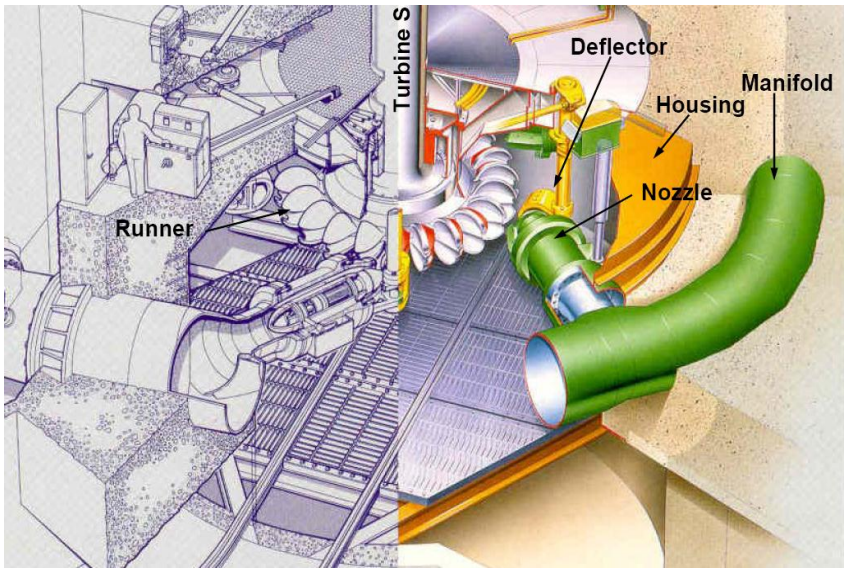

Figure 2: Multi-nozzle vertical Pelton turbine

Performance and reliability related components of a Pelton turbine consist of a distributor/manifold, housing, needle jet/nozzle, impulse runner and discharge chamber.

Distributor/Manifold: The function of the distributor (or manifold) is to provoke an acceleration of the water flow toward each of the main injectors. The advantage of this design is to keep a uniform velocity profile of the flow.

Housing: The function of the housing is to form a rigid unit with passages for the needle servomotor piping, feedback mechanisms, and the deflector shafts. The shape of the wetted side of the housing is important for directing the exit water effectively away from the runner.

Needle Valve/Nozzle: The function of the needle jet (or nozzle) is to regulate the flow of water to the runner in an impulse turbine runner. The needle jet is regulated by the governor via mechanical-hydraulic or electro-hydraulic controls. The shape is designed for rapid acceleration at the exit end and for assuring a uniform water jet shape at all openings. The needle valve/nozzle assembly is placed as close to the runner as possible to avoid jet dispersion due to air friction [2].

Runner: The runner consists of a set of specially shaped buckets mounted on the periphery of a circular disc. It is turned by forced jets of water which are discharged from one or more nozzles. The resulting impulse spins the turbine runner imparting energy to the turbine shaft. The buckets are split into two halves so that the central area does not act as a dead spot (no axial thrust) incapable of deflecting water away from the oncoming jet [2].

Discharge Chamber: The function of the discharge chamber is to enable water exiting the runner to fall freely toward the drainage. It also functions as a shield for the concrete work and prevents concrete deterioration due to the action of the water jets. Correct water level regulation (surge chambers) inside this chamber is critical for maximum efficiency.

Non-performance but reliability related components of a Pelton turbine include the deflector, turbine shaft, and guide bearing.

Deflectors: The deflectors serve to bend the jet away from the runner at load rejections to avoid a high speed increase. It also protects the jet against exit water spray from the runner. The deflector arc is bolted to the deflector support structure frame with the control valve of the needle servomotors. A seal ring around the deflector shaft bearing housing prevents water and moisture from penetrating into the bearing.

Turbine Shaft: The function of the turbine shaft is to transfer the torque from the turbine runner to the generator shaft and rotor. The shaft typically has a bearing journal for oil lubricated hydrodynamic guide bearings on the turbine runner end. Shafts are usually manufactured from forged steel, but some of the larger shafts can be fabricated.

Guide Bearing: The function of the turbine guide bearing is to resist the mechanical imbalance and hydraulic side loads from the turbine runner, thereby maintaining the turbine runner in its centered position in the runner seals. It is typically mounted as close as practical to the turbine runner and supported by the head cover. Turbine guide bearings are usually oil lubricated hydrodynamic (babbitted) bearings.

1.2 Summary of Best Practices

1.2.1 Performance/Efficiency and Capability - Oriented Best Practices

Performance levels for turbine designs can be stated at three levels as follows:

The Installed Performance Level (IPL) is described by the unit performance characteristics at the time of commissioning. These may be determined from reports and records of efficiency and/or model testing conducted prior to and during unit commissioning.
The Current Performance Level (CPL) is described by an accurate set of unit performance characteristics determined by unit efficiency testing, which requires the simultaneous measurement of flow, head, and power under a range of operating conditions as specified in the standards referenced in this document.
Determination of the Potential Performance Level (PPL) typically requires reference to new turbine design information from manufacturers to establish the achievable unit performance characteristics of replacement turbine(s).

- Periodic testing to establish accurate current unit performance characteristics and limits.

- Dissemination of accurate unit performance characteristics to unit operators, local and remote control and decision support systems, and other personnel and offices that influence unit dispatch or generation performance.
- Real-time monitoring and periodic analysis of unit performance at CPL to detect and mitigate deviations from expected efficiency for the IPL due to degradation or instrument malfunction.
- Periodic comparison of the CPL to the PPL to trigger feasibility studies of major upgrades.
- Maintain documentation of IPL and update when modification to equipment is made (e.g., hydraulic profiling, unit upgrade, etc.).
- Trend loss of turbine performance due to condition degradation for such causes as metal loss (cavitation, erosion, and corrosion), opening of runner seal, and increasing water passage surface roughness.
- Include industry acknowledged advances for updated turbine component materials and maintenance practices.
- Adjust maintenance and capitalization programs to correct deficiencies.

1.2.2 Reliability/Operations and Maintenance - Oriented Best Practices

- Use ASTM A743 CA6NM stainless steel to manufacture Pelton turbine runners and nozzle assembly needles. This martensitic grade of stainless steel is a good compromise between its performance properties (resistance to wear, erosion, and cavitation) versus the austenitic grade stainless steels (300 series) which carry an inhibitive higher cost. [15]
- Repair damage from erosion and cavitation on component wetted surfaces with 309L stainless steel welding electrodes. This austenitic grade stainless steel enables the avoidance to post heat treatment of repaired component and increases cavitation resistance.
- Adequate coating of the turbine wetted components not only prevents corrosion but has added benefits of improved performance.
- Kidney loop filtration should be installed on turbine guide bearing oil systems.
- Automatic strainers with internal backwash should be installed to supply uninterrupted supply of clean water to water lubricated turbine guide bearings.
- Monitor trends for the condition of turbine for decreasing Condition Indicator (CI) and decrease in reliability (i.e., an increase in Equivalent Forced Outage Rate (EFOR) and a decrease in Effective Availability Factor (EAF)). Adjust maintenance and capitalization programs to correct deficiencies.

1.3 Best Practice Cross-references

- I&C - Automation

- Mechanical - Lubrication System
- Electrical - Generator
- Mechanical – Governor
- Mechanical – Raw Water System

2.0 Technology Design Summary

2.1 Material and Design Technology Evolution

Pelton turbine runners are typically manufactured as one piece either as a casting or as a welded fabrication. Very old runners (i.e., early 1900's or before) were cast from cast iron or bronze and later replaced with cast carbon steel. Today, runners are either cast or fabricated from carbon steel or stainless steel. Just as materials have improved for modern turbine runners, so has the design and manufacturing to provide enhanced performance for power, efficiency, and reduced cavitation damage.

Best practices for the turbine begins with a superior design to maximize and establish the baseline performance while minimizing damage due to various factors including cavitation, pitting, and rough operation. The advent of computerized design and manufacturing which occurred in the late 1970's and 1980's made many of the advancements of today possible. Modern Computational Fluid Dynamics (CFD) flow analysis, Finite Element Analysis techniques (FEA) for engineering, and Computer Numerically Controlled (CNC) in manufacturing have significantly improved turbine efficiency and production accuracy.

2.2 State of the Art Technology

Turbine efficiency is likely the most important factor in an assessment to determine rehabilitation or replacement of the turbine. Such testing may show CPL has degraded significantly from IPL. Figure 3 is an example of the relative efficiency gains of a Pelton unit. Regardless of whether performance has degraded or not, newer turbine designs are usually more efficient than those designed 30 to 40 years ago. Also, a new turbine can be designed using actual historical data rather than original design data providing a turbine more accurately suited for the site.

Newer "state of the art" turbine designs can not only achieve the PPL but also provide decreased cavitation damage based on better hydraulic design and materials.

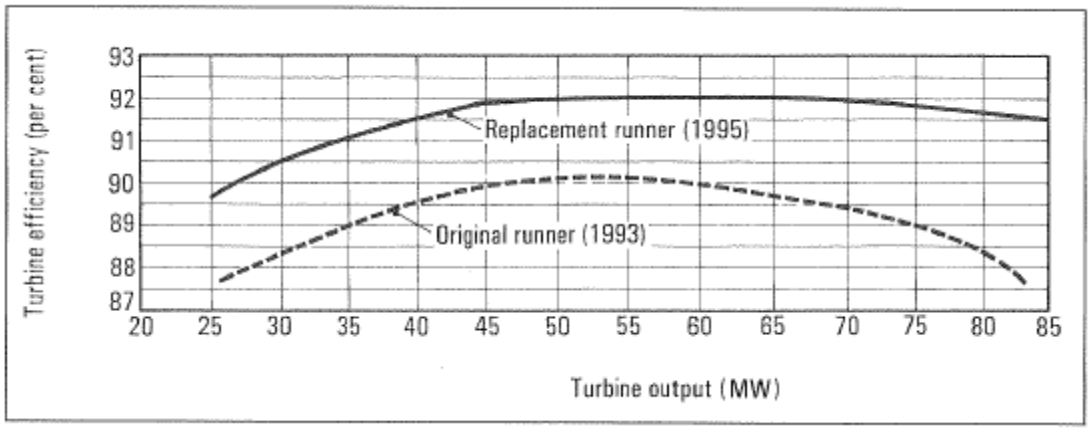

Figure 3: Example - Original vs. New Performance Curves [7]

3.0 Operation and Maintenance Practices

3.1 Condition Assessment

All Pelton turbine arrangements, vertical or horizontal, have four major components that are critical to performance losses.

- The Runner: There are losses due to friction and turbulence by surface deterioration and subsequent hydraulic bucket geometry changes.
- The Housing/Discharge Chamber: There are losses due to case splashing, air ventilation, and tail-water interference.
- The Needle Valves/Nozzles: There are losses due to unbalanced velocity profiles and turbulent fluctuation causing "bad jet quality" in the form of jet deviation or jet dispersion.
- The Distributor/Manifold: There are losses due to friction, bends, and bifurcations (the split of water into two streams) [5].

The typical losses in a Pelton turbine are approximately as follows:

- Inlet pipe (Distributor) and Injector (Nozzle) - 0.5 to 1.0%
- Runner - 6.5 to 9.0%
- Turbine housing/discharge chamber - 0.5 to 1.0%

A high head multi-jet turbine has relatively lower losses, whereas a low head horizontal unit has relatively higher losses [3].

3.1.1Runner

The surface roughness of the runner bucket must be assessed. There are two causes of this surface deterioration; cavitation (Figure 4) and sand/silt erosion (Figure 5). A careful visual inspection can be performed during an outage when the unit is in a dry state.

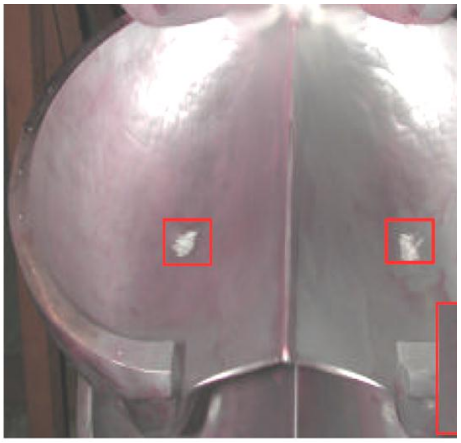

Figure 4: Cavitation damage on runner bucket [14]

Figure 5: Erosion damage on runner bucket [14]

There is also a possibility of the combined effect of sand/silt erosion and cavitation in the hydraulic turbine components. It must be noted that properly designed hydraulic Pelton runners do not cavitate. Yet, even in cavitation-free geometry, surface roughness due to sand erosion at high velocity regions may initiate cavitation erosion. The synergic effect of sand erosion and cavitation can be more pronounced than their individual effects.

Bucket erosion has been found to vary with the jet velocity. As compared to water quality or intake elevation, the jet velocity is the strongest parameter in bucket erosion. Since jet velocity is a function of head, high head turbines are more vulnerable to silt erosion. Based on typical qualitative studies, it was found that the sharp edge of the splitter became blunt and the depth of the bucket increased due to sand/silt erosion [14].

The jet loading is also important in determining the bucket sizing. Most modern runner designs optimize the ratio of bucket width to jet diameter (approximately 3.6 to 4.1) depending on the number of jets and rotational speed. Older machines were often designed with a lower overall rotational speed and with larger bucket widths compared with more modern runner designs [7].

An appropriate indicator of efficiency loss due to erosion on a Pelton runner is the width of the splitter as a percentage of bucket width. A 1% increase in relative splitter width represents approximately a 1% decrease in efficiency [3].

3.1.2 Housing/Discharge Chamber

Appropriate venting prevents the runner discharge water from building up in the housing [7]. The housing ventilation points need to be assessed to ensure that they are clear allowing full ventilation. The tailwater levels below the runner must not interfere with the jet flow. These water levels must remain within the OEM designed range. Jet interference prevents regular flow in the buckets and results in the sharp deterioration of turbine output

power with cavitation and vibration [8]. Figures 6 and 7 illustrate the negative effects of jet interference splash on the turbine performance.

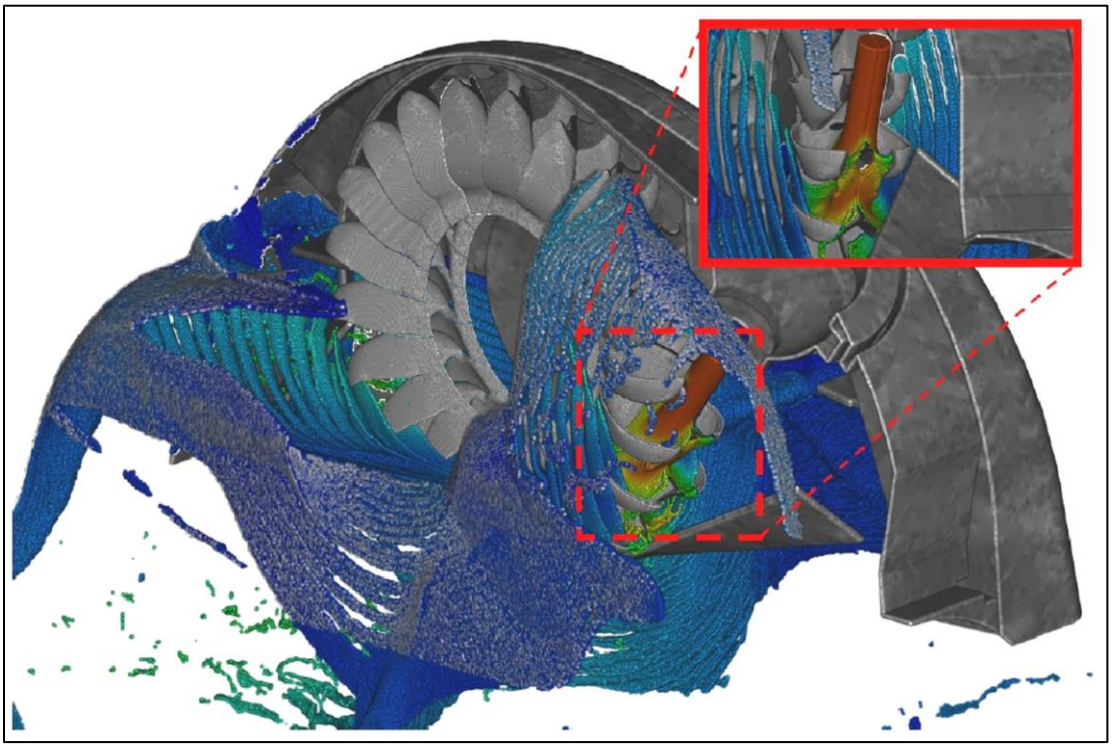

Figure 6: Modeling of jet interference within housing [8]

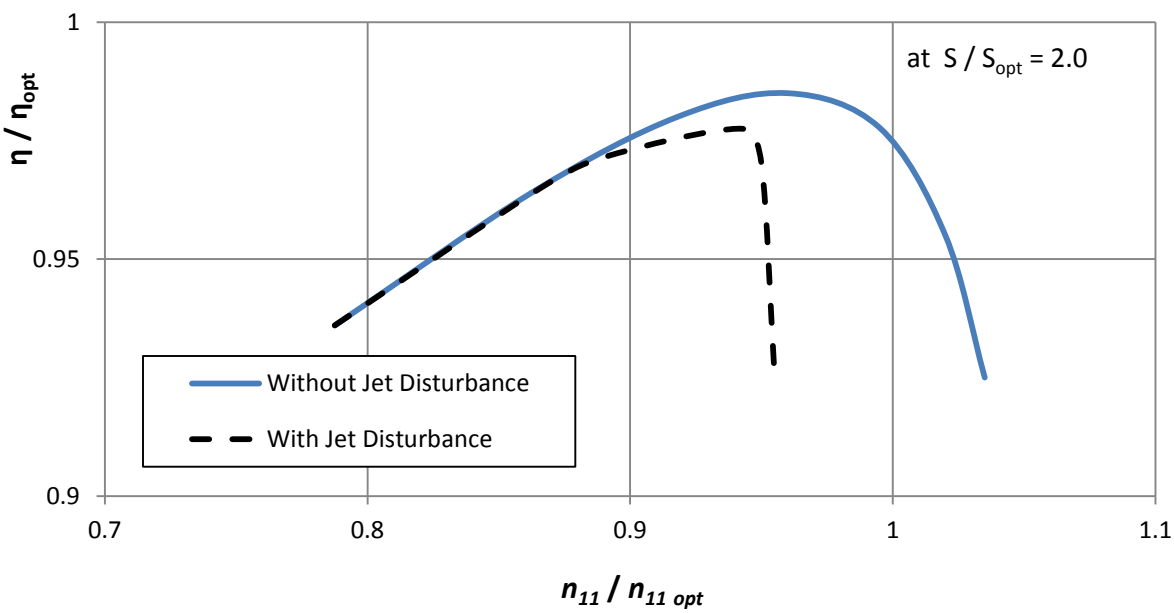

Figure 7: Typical Deterioration Due to Jet Disturbance [8]

3.1.3 Nozzle

Deterioration assessment of the nozzle is paramount. Needle erosion, as seen in Figures 8 and 9, can cause both direct and indirect losses. Direct losses are losses due to friction and turbulence (inner friction). Indirect losses are caused by bad jet quality as shown in Figure 10 [5].

The purpose of the needle and nozzle is to concentrate the jet in a cylindrical and uniform shape in order to maximize the energy transformation in the runner. Wear on the needle and nozzle causes a jet deformation which results in decay of efficiency and an appearance of cavitation.

Figure 8: Eroded Needle

Figure 9: Eroded Needle

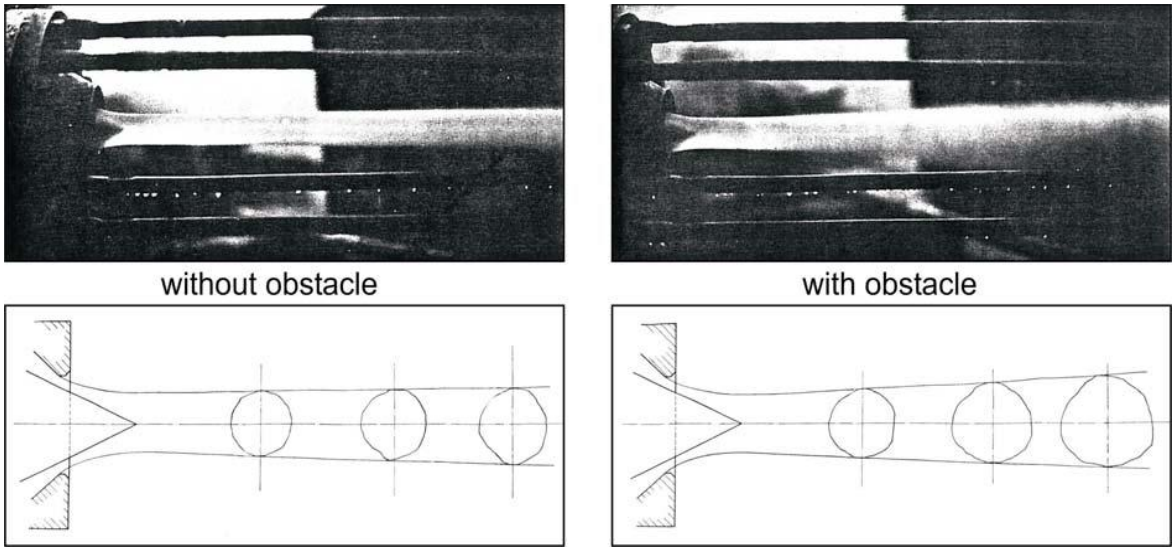

Figure 10: Photos and sketches of jet quality

Jet visualization is an assessment tool to determine jet deformation. Jet dispersion and jet deviation can be quantitatively determined from visualization in most cases. Clear correlation between turbine efficiency and jet quality has been observed. The installation of equipment for prototype visualization is delicate since the best positioning of camera and lighting instrumentation cannot be found on the basis of trial and error but must be based on experience due to the inaccessibility of the equipment.

Furthermore, the mechanical forces of possible water impingement on the camera and lighting instrumentation require a rigid installation (Figure 11). Housings for camera and lights should be waterproof, and measures must be taken to avoid condensation building up on the lenses. In order to achieve acceptable image quality under the adverse circumstances present in the housing of an operating Pelton turbine, special equipment is necessary. The camera housing and the stroboscopic lights are mounted within protection housings in the shelter of the injector and cut-in deflector and could be adjusted at different distances from the nozzle exit with a stepping motor [6].

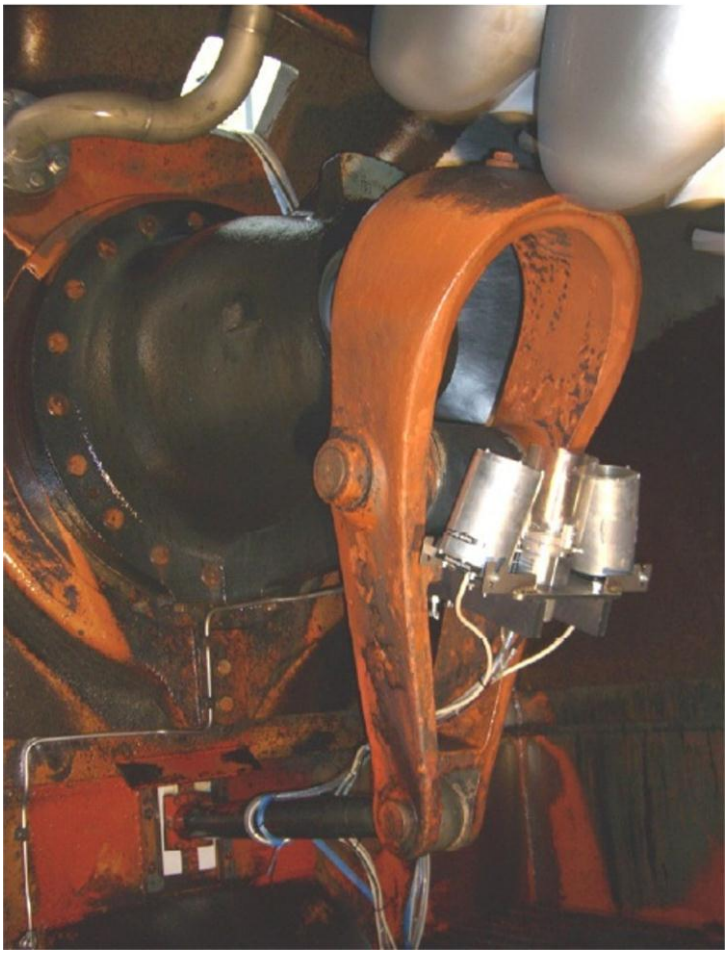

Figure 11: Internal view of bracket with camera supports for visualization

3.1.4 Distributor/Manifold

Depending on the age of the turbine unit and original hydraulic design, the distributor size may contribute to losses and turbulence. A good rule of thumb is to size the unit so that at full load the spiral velocity head is 10% or less of the total unit's velocity head. Older spiral distributors were often constructed in large curved cast sections as compared with newer units that are usually constructed of shorter, mitered ring sections [7].

The ring sections must be assessed routinely for friction which increases internal surface deterioration. This can take the form of a visual inspection carefully performed during an outage situation when the unit is in a dry state. For examples of distributor arrangements see Figures 12 and 13.

Figure 12: Twin Nozzle distributor arrangement

Figure 13: Multi-Nozzle distributor arrangement

3.2 Operations

Turbine performance is often represented by a graph of turbine efficiency curves versus flow or output as shown in Figure 14. Also shown are typical turbine performance curves illustrating the relationship between modern performance, the original design, and a deteriorated turbine runner (noted as "present performance") [3].

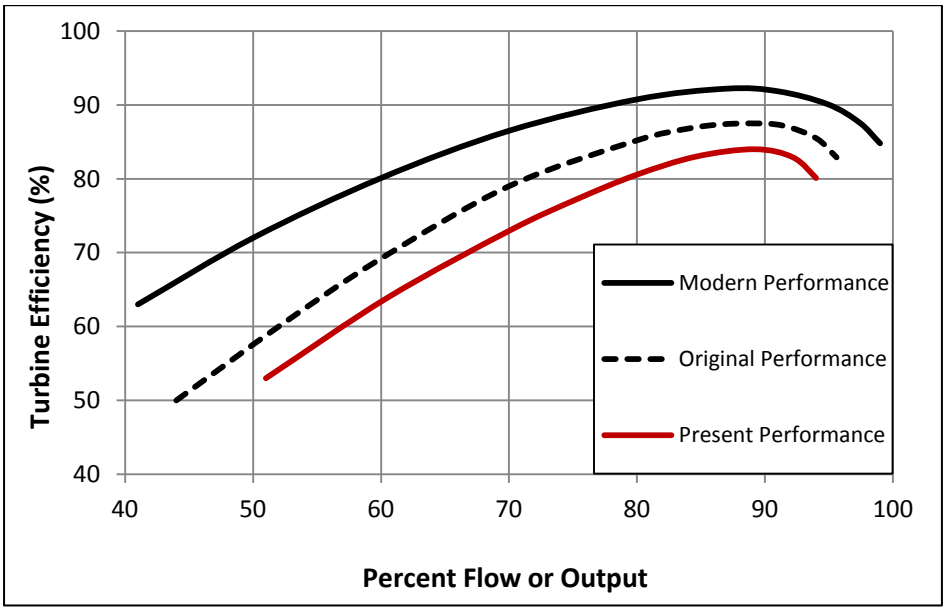

Figure 14: Typical Performance Chart for Pelton Unit [3]

Performance data must be accurately collected. The performance of the turbine can degrade over time due to cavitation and/or erosion damage and resulting weld repairs. Periodic performance checks, through absolute or relative (e.g. index) testing, are necessary for maintaining accuracy and must be made at a number of operating heads in order to be comprehensive [3].

Frequent index testing, especially before and after major maintenance activities on a turbine, should be made to detect changes in turbine performance at an early stage and establish controls. Plants should as a best practice perform periodic performance testing such as index testing according to PTC 18 [16] to assure the most accurate operating curves are available to optimize plant output. Routinely, this should be done on a 10 year cycle as a minimum.

3.3 Maintenance

3.3.1 Weld Repair

It is commonly accepted that turbines normally suffer from a progressive deterioration in performance over time (in default of restorative action) [4]. The usual causes include cavitation damage, abrasive erosion wear, galvanic corrosion, and impact damage from debris passing through the unit.

Performance-related maintenance techniques involve mainly weld repair of the damage and small cracks in the turbine components such as the runner, housing, and distributor tubes. The best practice is to use a 309L stainless steel welding electrode to return original geometry to runner buckets

3.3.2 Grinding Template

Errors in welding repairs to original bucket profile occur as the unit ages. Original bucket contour templates should be available at the plant. Trained maintenance personnel should use these templates to grind and polish the buckets thereby returning them back to OEM specifications.

3.3.3 Surface Coating

After assessment of the water supply quality and historical wear data, it can be evaluated whether a coating over the natural polished finish of the ASTM A743 [15] stainless steel (preferred modern erosion and corrosion resistant material) bucket is required. The results from North American technical papers are inconclusive regarding the benefits for any hard coating.

3.3.4 Turbine Shaft

Routine turbine shaft maintenance consists of minimizing the corrosion of the shaft surface with a light coat of oil in the non-water contact areas and periodic re-coating of areas that come in contact with water with a robust paint such as epoxy. Major

maintenance includes refurbishment on bearing journals, replacement of wearing sleeves, and re-truing coupling faces during a major unit overhaul.

3.3.5 Guide Bearings

Turbine guide bearings are usually oil lubricated hydrodynamic bearings. Maintenance of an oil lubricated bearing and its reliability is directly connected to the quality of the supplied oil used for lubrication and cooling. Any contamination of the oil either with debris or water will increase the likelihood of a bearing failure.

A best practice is to install an auxiliary kidney loop filtration system. This system can be periodically run if lubricant condition testing shows debris and/or water within the bearing oil supply.

4.0 Metrics, Monitoring and Analysis

4.1 Measures of Performance, Condition, and Reliability

The fundamental process for a hydro turbine is described by the efficiency equation, which is defined as the ratio of the power delivered by the turbine to the power of the water passing through the turbine.

The general expression for this efficiency is: $\eta = \frac{P}{\rho g Q H}$ [10]

Where:
- **η** is the hydraulic efficiency of the turbine
- **P** is the mechanical power produced at the turbine shaft (MW)
- **ρ** is the density of water (1000 kg/m^3)
- **g** is the acceleration due to gravity (9.81 m/s^2)
- **Q** is the flow rate passing through the turbine (m^3/s)
- **H** is the effective pressure head across the turbine (m)

Turbine performance parameters for Pelton units are defined in ASME PTC-18 [16] and IEC 60041 [17] and typically include the following: Generator Output, Turbine Discharge, Headwater and Tailwater Elevations, Inlet Head, Discharge Head, Gate Position, and Water Temperature.

Typical vibration measurements may include: shaft displacement (x and y) at turbine and generator bearings and thrust bridge displacements (z). Acoustic emission on the draft tube access door or liner may be measured to track relative cavitation noise.

The condition of the Pelton turbine can be monitored by the Condition Indicator (CI) as defined according to *HAP Condition Assessment Manual* [11].

Unit reliability characteristics, as judged by its availability for generation, can be monitored by use of the North American Electric Reliability Corporation's (NERC) performance indicators, such Equivalent Availability Factor (EAF) and Equivalent Forced Outage Factor (EFOR). These are universally used by the power industry. Many utilities supply data to the Generating Availability Data System (GADS) maintained by NERC. This database of operating information is used for improving the reliability of electric generating equipment. It can be used to support equipment reliability and availability analyses and decision-making by GADS data users.

4.2 Data Analysis

Analysis of test data is defined in ASME PTC-18 [16] and IEC 60041 [17]. Basically, the analysis should determine unit efficiency and available power output relative to turbine discharge, head, and determine operating limits based on vibration and acoustic emission measurements (CPL). The results will be compared to previous or original unit test data (IPL) to determine efficiency, capacity, annual energy, and revenue loss. The results will also be compared to new unit design data (from turbine manufacturer) to determine potential efficiency,

capacity, annual energy, and revenue gain (PPL). For the latter, calculate the installation/rehabilitation cost and internal rate of return to determine upgrade justification. Separately, determine the justification of draft tube profile modification using turbine manufacturer's data.

Analytically or using field test data, determine the efficiency, annual energy, and revenue gain associated with the use of draft tube gate slot fillers. Calculate the implementation cost and internal rate of return.

The condition assessment of a Pelton turbine is quantified through the CI as derived according to *HAP Condition Assessment Manual* [11]. The overall CI is a composite of the CI derived from each component of the turbine. This methodology can be applied periodically to derive a CI snapshot of the current turbine condition such that it can be monitored over time and studied to determine condition trends that can impact performance and reliability.

The reliability of a unit as judged by its availability to generate can be monitored through reliability indexes or performance indicators as derived according to NERC's Appendix F, *Performance Indexes and Equations* [11].

4.3 Integrated Improvements

The periodic field test results should be used to update the unit operating characteristics and limits. Optimally, these would be integrated into an automatic system (e.g., Automatic Generation Control), but if not, hard copies of the curves and limits should be made available to all involved personnel (particularly unit operators) and their importance to be emphasized.

Justified projects (hydraulic profiling, unit upgrade, etc.) and a method to constantly monitor unit performance should be implemented.

As the condition of the turbine changes, the CI and reliability indexes are trended and analyzed. Using this data, projects can be ranked and justified in the maintenance and capital programs to bring the turbine back to an acceptable condition and performance level.

The improvement of any hydraulic machinery performance can result from three types of intervention:

- Replacement of obsolete runner (the profiled machinery parts) with new ones.
- Replacement/Improvement of nozzles with new nozzle components.
- Repair for surface restoration and for improvement of wear resistance.

It is clear that these interventions are not alternatives but complementary depending on the actual problems of hydraulic design: obsolescence of turbine parts and/or corrosion, erosion, or cavitation of turbine parts [10].

<u>Runner Replacement</u>

The modeling of the modern Pelton turbine runner geometry can be carried out with Computational Fluid Dynamics (CFD) analysis of the jet/bucket interaction. For Pelton runners, both the flow field itself and the influence of water on the structural properties are more difficult to determine than for Francis or Kaplan turbines since Pelton buckets are moving through the jets filling and emptying continuously. The bucket unsteady loading analysis requires knowledge of the unsteady pressure loading in the rotating buckets [9].

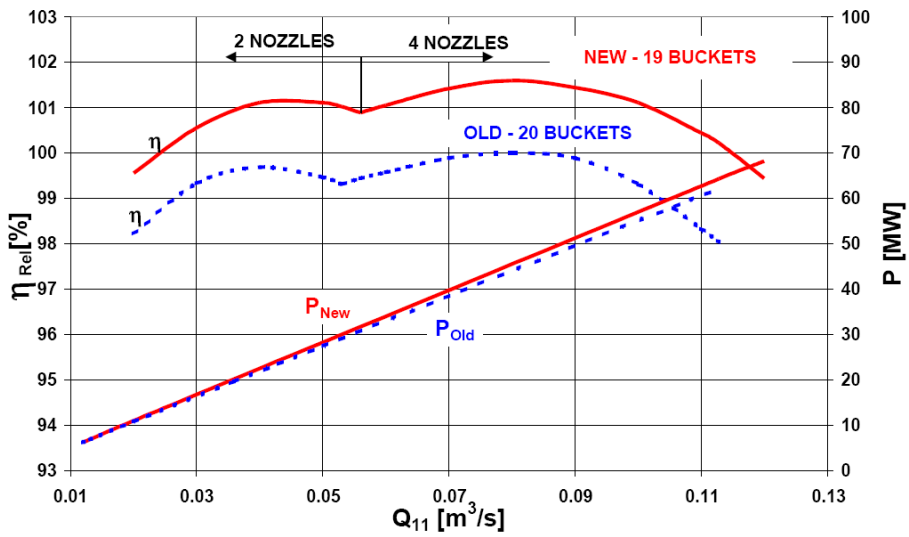

Figure 15: Typical results for new runner upgrade [13]

<u>Needle Seat Enlargement</u>

A detailed study showed that the turbine jets could be easily enlarged up to 6% in diameter with minor negative effects on efficiency but with a substantial increase in output. This study details a six-jet Pelton unit with rated head of 675.7 m and an output of 75.2 MW at a rated jet of 152 mm diameter with a discharge of 12.6 m^3/s. The new rated power capacity is 87.6 MW with an enlarged jet of 160 mm diameter. Most manufacturers size the needle seat to accommodate some nozzle machining for maintenance. Normally this will not significantly affect the contact sealing or interface relationship at small needle opening [7]. Figure 16 shows the typical components that make up a nozzle assembly including the needle seat.

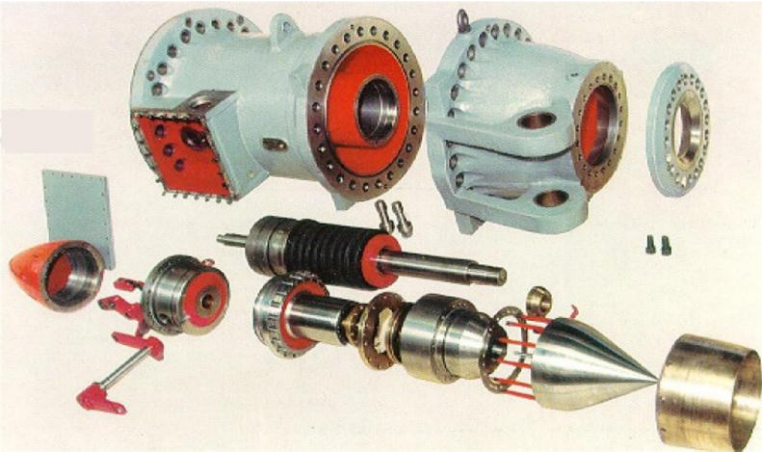

Figure 16: Typical modern nozzle assembly

5.0 Information Sources

Baseline Knowledge:

1. TERI, The Energy Resources Institute: *Electro-Mechanical Equipment – Selection, Best Practice and use of Checklists* - August 2010
2. ASME *Hydro Power Technical Committee: The Guide to Hydropower Mechanical Design* - 1996
3. *Hydro Life Extension Modernization Guide, Volume 2: Hydromechanical Equipment,* EPRI, Palo Alto, CA: 2000. TR-112350-V2.
4. EPRI, *Increased efficiency of Hydroelectric Power,* EM 2407 – June 1992

State of the Art:

5. Karakolcu, A., Geppert, L., Marongiu, J. C.: *Performance Prediction in Pelton Rehabilitation Projects* – Vienna 2010
6. Staubli, T., Bissel, C., Leduc, J.: *Jet Quality and Pelton Efficiency*
7. Gass, M.E.: *Modernization and performance improvements of vertical Pelton turbines – Hydropower & Dams Issue Two* - 1998
8. Kubota, T., Kawakami, H.: *Observation of Jet interference in 6-Nozzle Pelton Turbine* -FUJI Electric Review 1990
9. Keck, H., Wolfgang, M., Weiss, T., Sick, M.: *Recent Developments in the Dynamic Analysis of Water Turbines* - 2007
10. Cateni, A., Margri, L., Grego, G.: *Optimization of Hydro Power Plants Performance importance of Rehabilitation and Maintenance in Particular for Runner* – 2008
11. ORNL, *HAP Condition Assessment Manual*
12. Spicher, T., *Hydro Wheels: A Guide to Maintaining and Improving Hydro Units*, HCI Publications, 3rd Edition 2002
13. Vesely, J., Varner, M.: *A case study of upgrading of 62.5MW Pelton Turbine* – 2000
14. Thapa, B., Chaudhary, P., Dahlhaug, O., Upadhyay, P.: *Study of Combined Effect of Sand Erosion and Cavitation in Hydraulic Turbines* -2007

Standards:

15. ASTM A743: *Standard Specification for Castings, Iron-Chromium-Nickel, Corrosion Resistant for General Application* - 2006
16. ASME PTC 18, *Hydraulic Turbines and Pump-Turbines, Performance Test codes* - 2011
17. IEC 60041 *Field Acceptance Tests to Determine the Hydraulic Performance of Hydraulic Turbines, Storage Pumps and Pump-Turbines*, 1991
18. NERC, Appendix F, *Performance Indexes and Equations*, January, 2011

It should be noted by the user that this document is intended only as a guide. Statements are of a general nature and therefore do not take into account special situations that can differ significantly from those discussed in this document.

Best Practice Catalog

Lubrication System

Revision 2.0, 07/24/2012

1.0 Scope and Purpose

This best practice for a lubrication system addresses the technology, condition assessment, operations, and maintenance best practices with the objective to maximize performance and reliability of generating units.

The primary purpose of the oil lubrication system is to supply clean oil at an appropriate temperature and pressure to the bearings of the turbine-generator during operation. It is also a key reliability system for the other machinery under the Power Train Equipment.

1.1 Hydropower Taxonomy Position

Hydropower Facility → Powerhouse → Power Train Equipment → Balance of Plant/Auxiliary Components → Lubrication System

1.1.1 Lubrication System Components

Bearing lubrication systems are critical to unit operation. There are a number of different types of lubrication systems such as pressure, gravity, and submersion. The reliability related components of lubrication systems include the lubricant/oil, filter sub-system, cooling sub-system, oil pumps, vessel and piping, console/skid, and instrumentation/alarm. [1]

Figure 1 illustrates a typical lubrication system console.

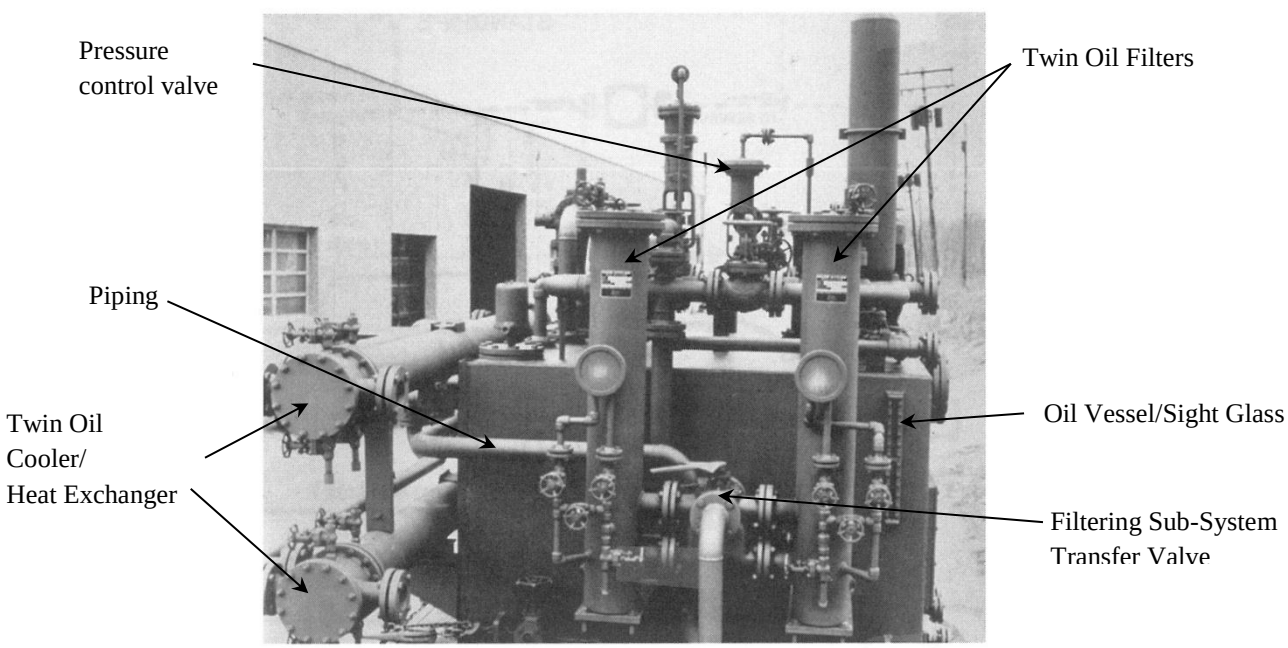

Figure 1: Typical Modular Oil Console Arrangement [3]

Lubricant/Oil: The functions of the lubricant/oil are to:

- Minimize friction and wear in hydro machinery
- Maintain internal cleanliness by suspending contaminants or keeping contaminants from adhering to components.
- Cool moving elements, absorb heat from the contact surface area, and transport it to a location in which it can be safely dissipated.
- Dampen shock (cushion the blow of mechanical shock). A lubricant film can absorb and disperse these energy spikes over a broader contact area.
- Prevent corrosion or minimize internal component corrosion. This can be accomplished either by chemically neutralizing the corrosive products or by setting up a barrier between the components and the corrosive material.
- Transfer energy. A lubricant may be required to act as an energy transfer medium as in the case of hydraulic equipment.

Filter Sub-System: The function of the filter sub-system is to continuously provide clean auxiliary fluid (oil) to the critical equipment. A typical filtration specification for auxiliary system is 10 absolute particle size meaning the greatest size of any solid particle in the oil film should be 10 micron. There are two types of filtration systems: “inline” and “offline” filtration. The inline filter sub-system consists of a transfer valve, which allows transfer from one bank of components to the stand-by bank of components without significant pressure pulsations being introduced into the system, filters, differential pressure indication, and alarm. Offline filtration, often call Kidney Loop filtration, functions independently of the designed lubrication system of the unit.

Cooling Sub-System: The function of this sub-system is to continuously provide cool auxiliary fluid (oil) at the required temperature to the critical equipment. Most coolers in use in hydropower plants are of a shell and tube heat exchange design since cooling water is readily available. As with filter sub-systems, they consist of a transfer valve, as well as twin heat exchangers and a temperature transmitter and alarm.

Oil Pumps: The function of the oil pumps are to continuously supply the system fluid at the required flow rate. This means it must be capable of interrupted operation for the same period as the turbine it is servicing.

Vessel and Piping: The vessel functions as the oil reservoir for the system. The correct sizing is critical for the hydro equipment that the lubrication system is servicing. Size will be a function of system flow and subsequently the amount of flow the hydro equipment (main guide bearings, thrust bearings) will actually pass. The function of the piping is to connect the console/skid auxiliary equipment (pumps, vessel, etc.) to the hydro units it services. The typical oil velocities are on the order of 4 to 6 feet per second.

Console/Skid: The function of the console/skid is to house most of the lubrication system components (pumps, vessel, etc.). Since auxiliary equipment must be maintained and calibrated during operation, it is important for the console/skid to be sized with ample space for maintenance personal.

Instrumentation/Alarms: The function of the instrumentation is to measure and regulate the process variables of the auxiliary fluid (oil) such as flow, temperature, level, and pressure. Pressure indicators, temperature indicators, and differential pressure transmitters are examples of key instrumentation.

1.2 Summary of Best Practices

1.2.1 Performance/Efficiency & Capability - Oriented Best Practices

There are no best practices directly associated with the unit efficiency and capacity.

1.2.2 Reliability/Operations & Maintenance - Oriented Best Practices

- Maintain clean, dry oil by periodic analysis of oil condition and regular sampling for visual and laboratory examination.
- Monitor oil filter change time interval (when the filter differential pressure alarm is activated) to clean oil tank and rundown tanks. This will involve maintaining operating and temperature records of the hydro plant oil system.
- Stainless steel reservoir, vessels, and piping can be used to ensure minimum oil flushing time, optimum machinery component life, and unit reliability.
- High pressure lubrication system can be used on thrust bearings to reduce friction during start-up and shut down.
- System pumps having mechanical seals are recommended instead of shaft packing
- Follow correct oil flushing procedures which will produce an oil system that does not require frequent on-line filter changeover.
- The use of centrifugal pumps eliminates the need for relief and back pressure (bypass) control valves within the lubrication system
- Monitor turbine vibration. Setting the shaft vibration alarm at 50% of the initial field value will allow early detection of rotor condition change and initiate investigation and an action plan for corrective action before a rotor or component failure occurs.
- Ensure continuous venting of the non-operating cooler and filter in cold ambient applications.
- An auxiliary Kidney Loop filtration system should be used on turbine guide bearing oil to remove debris and water periodically.

- Require a Factory Acceptance Test (FAT) for any new oil consoles to duplicate field conditions as closely as possible and record response times for transients.
- Install sight glasses in the drain lines of positive displacement pump relief valve to confirm that the relief valve is not passing.
- Label oil system piping with colored tape to help personnel to understand system operation and how to take corrective action quickly to prevent unit damage.

1.3 Best Practice Cross-references

- I&C – Automation
- Mechanical – Francis Turbine
- Mechanical – Propeller/Kaplan Turbine
- Mechanical – Pelton Turbine
- Electrical – Generator
- Mechanical – Governor

2.0 Technology Design Summary

2.1 Material and Design Technology Evolution

Early designs for oil lubricating systems for vertical hydro turbine-generator bearings consisted of pumps driven by gears or belts from the main shaft or by simple viscosity pumps which move oil by hydrodynamic action. Horizontal hydro turbine-generator bearings were often lubricated by oil rings riding on top of the shaft. Modern designs have evolved into systems which move the oil by electric motor driven pumps. This has many advantages such as providing electrical controls, backup pumps (AC and DC), and flexible capacities such as flow rates and pressures.

2.2 State of the Art Technology

There are number of designs for lubrication sub-systems that have become state of the art technology. Lube oil overhead tanks that are not stainless steel will reduce bearing life and protection Mean Time before Failure (MTBF) since there cannot be a filter between these tanks and system components. This is due to iron sulfide building up in the small clearances of the unit components which has resulted in premature failure. Stainless steel reservoirs, vessels and piping can be used to ensure minimum oil flushing time, optimum unit component life, and unit reliability. If oil flushing times can be reduced, or delayed all together, plant outage times can be significantly reduced. Replacement of existing non-stainless steel oil system piping, components, or the entire system can usually be justified in un-spared critical equipment.

The most common cause of oil system induced unit trips is the malfunction of relief valves and/or back pressure control. This can cause an unscheduled shutdown of a unit. The use of centrifugal pumps (Figure 2) eliminates the need for relief and back pressure (bypass) control valves. Single stage centrifugal pumps can be used whenever the ambient temperature along with the use of thermostatically controlled reservoir heaters maintain an oil viscosity that allows the use of a centrifugal pump (oil viscosity is low enough to minimize the effect of viscosity on centrifugal pump power – low viscosity correction factors).

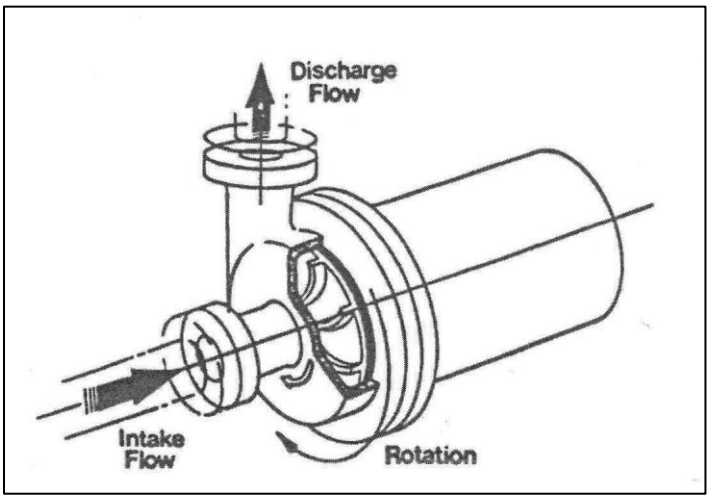

Figure 2: Centrifugal pump operation [3]

Centrifugal pumps cannot be used when high oil viscosities (>400 centistokes) are required. In those applications a positive displacement pump must be used. The function of all pumps in auxiliary system service is to continuously supply the system fluid at the required pressure and flow rate. In order to ensure reliable, trouble free operation, pump mechanical seals are recommended instead of shaft packing. A properly selected and installed pump mechanical seal in auxiliary system service can operate continuously for a three year period. Function definition will be met: 'to supply the system fluid at the required pressure and flow rate'.

The thrust bearing high pressure lubrication system provides high pressure oil between the thrust shoes and the runner to provide lubrication on start-up and shut-down of a unit. The oil is pumped from the bearing oil pot by a high pressure pump through a manifold to a port machined in each of the shoes. Each shoe should have an installed check valve to ensure that the oil cannot flow backwards. Figure 3 shows a typical oil ring on a thrust shoe for a high pressure lubrication system. The primary use for the high pressure lubrication system is to reduce friction during start-up and shut down, but it is also a very useful system during alignment. With the system on, it is possible for a couple of people to rotate a unit by hand or move the rotating components laterally on the thrust bearing [2].

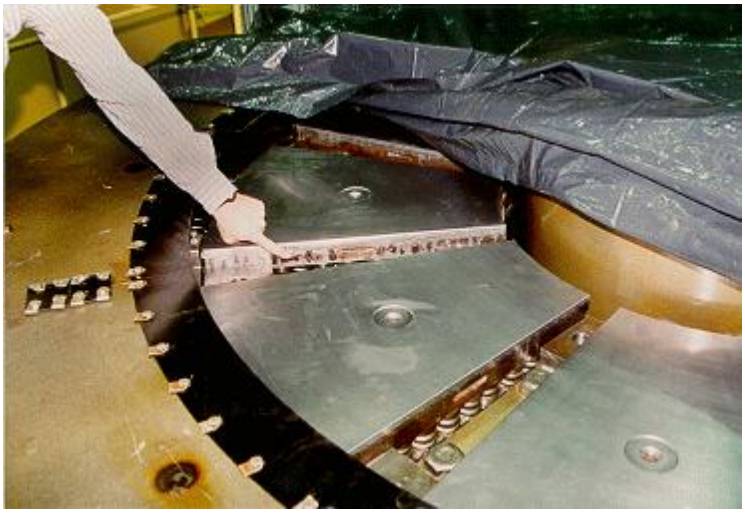

Figure 3: Lubrication Ports on Thrust Bearing [2]

Supplementary oil cleaning can be achieved by a separate system (Kidney Loop Oil Filtration System) in series with the existing lubrication system. (Figure 4)

Figure 4: Kidney Loop Oil Filtration System [L&S Electric, Inc.]

This system can reduce failures caused by dirty oil, thus, increasing life and performance of pumps, valves, servos, oil heads and other various hydraulic mechanisms. It can promote extended oil life and help eliminate moisture in oil.

3.0 Operation & Maintenance Practices

3.1 Condition Assessment

Samples of oil or any deposits need to be taken at regular intervals for visual examination and laboratory analysis. Best practices include daily visual examinations, monthly laboratory examinations for general system and oil conditions, and six-month laboratory examinations for a more in-depth determination of future oil life. As a result detection can be made at the start of deterioration, contamination, or other troubles and corrective action can be taken [4]. Figure 5 illustrates the oil film and the testing involved. Lubricant/oil condition assessment testing standards are as follows [5]:

- Viscosity ASTM D445
- RPVOT (Rotary Pressure Vessel Oxidation Test) ASTM D2272
- Water Content ASTM D1744
- Acid Number ASTM D664, ASTM D974
- ISO Cleanliness ISO 4406 [8]
- Rust ASTM D665
- Water Separability (Demulsibility) ASTM D1401
- Foam ASTM D892
- ICP Metals ASTM D6130

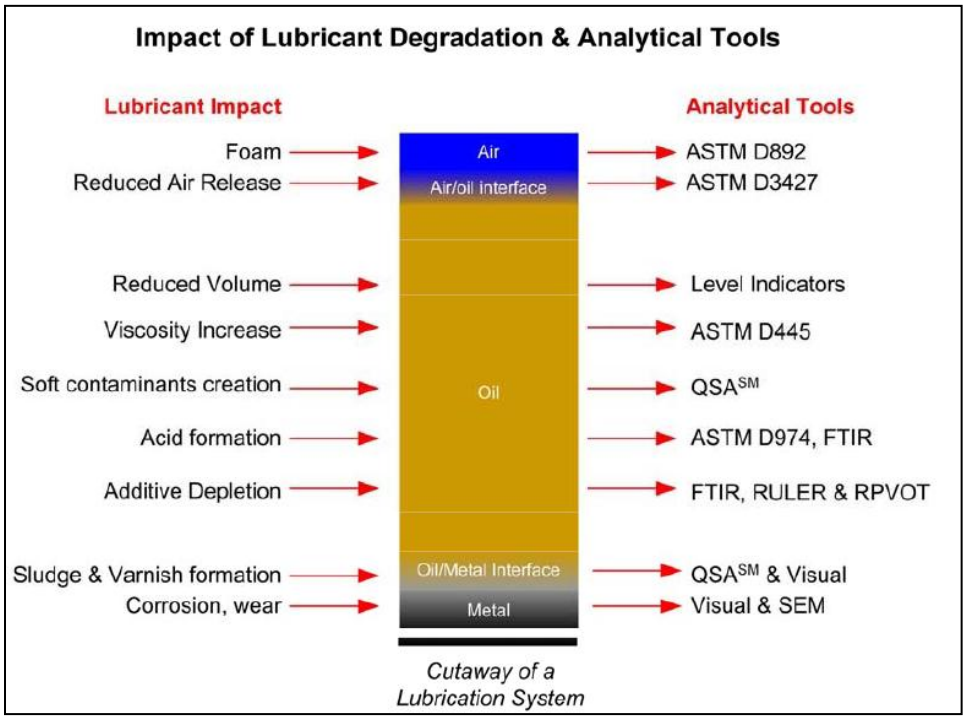

Figure 5: Testing for lubricant degradation in a Turbine Oil System [5]

These standards are referenced in ASTM D4304-06a [7]. Another condition assessment activity may involve the replacement an old lubrication system within a hydro modernization project where assessing newly purchased lubrication consoles is important for the long term success of the plant. It is a best practice to require a Factory Acceptance Test (FAT) for the oil console to duplicate field conditions as closely as possible and record response times for transients (main pump trip and two pump operation) to ensure optimum oil system field reliability.

As a minimum, the following items should be included in the FAT:

- Auto start of the auxiliary pump
- Two pump operation
- Relief valve checks
- Bypass (backpressure) valve proper valve position and stability
- Transfer valve operation
- Cooler tube leak check
- Filter pressure drop and particle check for bypassing
- Accumulator pre-charge and bladder condition (if applicable)
- Supply valve(s) – proper valve position and stability
- Proper supply flow, pressure, and temperature

Failure to completely check all oil system component functions during the FAT will result in delayed start-up and possibly lower than anticipated unit reliability for the life of the process unit. Data acquisition system data for all transient checks (pump trip and two pump operations) and transfer valve checks are required to be supplied for confirmation that oil supply pressure during the transient event does not fall to the trip setting.

3.2 Operations

All gravity drain oil systems accumulate debris (oil sludge, etc.) in the oil reservoir over time. Increasing the frequency of oil filter change (i.e., once per year to once every six months) indicates a need to clean the oil reservoir and rundown tanks at the next turnaround. It is a best practice to monitor oil filter change time, when the filter differential pressure alarm is activated, to clean oil tanks and rundown tanks. This is a predictive approach that will minimize oil reservoir and overhead tank cleaning cycles while still ensuring unit reliability. Every time the unit is shut down, any oil contained in the tank and associated debris will enter the lubrication system without the benefit of filtration. Therefore, attention should be given to any overhead oil tanks that have never been cleaned but are exposed to the process gas and associated process debris.

In cold climates (i.e., ambient temperatures below 15° C at any time of the year), cool, static oil in the non-operating cooler and filter will cause a transient pressure drop when it is comes on-line. Low oil pressure alarms will occur for critical equipment (e.g., when auxiliary pump does not start or does not start in time). It is a best practice to continuously vent the non-operating cooler and filter in cold ambient applications. An enable reliable operational transfer (cooler or filter) always maintains this non-operating equipment with open ventilation and the same

temperature as the operating equipment. Where an alarms/trip has been caused by the issue noted above, operating procedures should be revised and orifice vents installed if required.

Since only the oil film keeps gear and screw components from contacting each other, a plugged main pump suction strainer will rapidly increase pump clearance and cause the auxiliary pump to start. It is a best practice to install differential pressure transmitters to alarm on high differential pressure, for control room monitoring, around pump suction strainers especially screw and gear pumps. The source of the main pump strainer blockage will eventually plug the auxiliary strainer and result in auxiliary pump damage.

It is very difficult to confirm that a positive displacement pump relief valve is not passing. A friction-bound relief valve can cause an unexpected shutdown of an oil system by passing an additional amount of oil that can force the start-up of an auxiliary pump, therefore, exposing the unit to a shutdown if the auxiliary pump does not start in time. It is a best practice to install sight glasses in the drain lines of positive displacement pump relief valve to confirm that the relief valve is not passing.

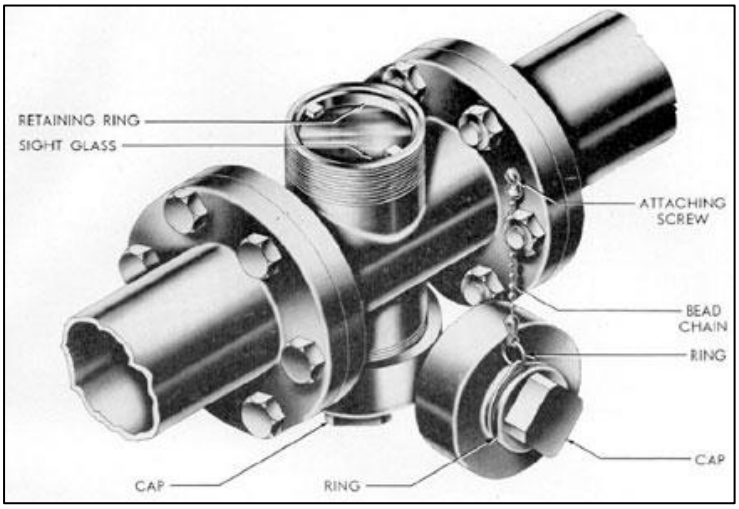

Figure 6: Sight glasses in the drain lines [Maritime Park Association]

Most oil system relief valves are the modulating type with a small bypass hole to prevent sticking of the valve. This allows a small continuous flow to pass through the valve. Feeling the discharge line of the relief valve gives a false impression of valve condition. Using sight glasses is a correct way to confirm the proper operation of relief valves.

Failure to mark and monitor control the valve stem position in oil systems has led to many unexpected replacements soon after a turnaround. It is a best practice to monitor control valve stem position to identified worn components and allowed replacement during an outage. By monitoring the control valve position (see Figure 6), a determination of components wear (rotary

pumps, bearings and seals) will ensure corrective action is taken during an outage. Marking the position of control valves (marking the stem and valve yoke with a straight edge) at the beginning of a run will give an instant indication of component wear for the following items:

- Rotary pumps (screw or gear) – if the bypass valve is closing over time.
- Bearing wear – if the lube oil supply valve is opening over time.
- Control component wear – if the control oil supply valve is opening over time.

Figure 7: Typical collection of data from the control valve assembly

Check the position of all marked control valves prior to the turnaround meeting to determine if the affected components need replacement during the turnaround. Note that turnaround action does not affect product revenue but unplanned action does. Replacement of an oil pump can take two days considering alignment. Replacement of a bearing or seal can take three to five days.

Using colored tape or paint to define each individual line of the system (supply lines, return lines, bypass lines) promotes ownership and personnel awareness on-site, therefore, increasing system safety and reliability. It is a best practice to label oil system piping with colored tape to help personnel to understand system operations and how to take corrective action quickly to prevent unit trips. Figure 7 shows examples of piping labels. Many critical machine unit shutdowns are the result of not monitoring the local instrument and components in the system. Failure to properly label piping, instruments, and components can lead to neglect and corresponding low oil system reliability.

Figure 8: Typical Piping Labels

3.3 Maintenance

Maintenance of an oil lubricated bearing and its reliability is directly connected to the quality of the supplied oil used for lubrication and cooling. Any contamination of the oil either with debris or water will increase the likelihood of a bearing failure.

Oil filters are usually positioned downstream of the oil coolers to prevent carbon steel (iron sulfide) particles from entering the machinery components and causing pre-mature wear/failure. Shell and tube oil coolers typically have the water in the tubes and oil in the shell and are made of carbon steel due to cost. It is a best practice to use of stainless steel coolers and filters. This can easily be justified and will ensure maximum life of machine components.

Lubrication system flushing may be either a displacement flush after a drain/fill or a high velocity flush for initial turbine oil fills. A displacement flush is performed concurrently during turbine oil replacement, and a high velocity flush is designed to remove contaminants entering from transport and commissioning of a new turbine. Displacement flushes, using separate flush oil, are to remove residual oil oxidation products that cannot be removed by draining or vacuum. A displacement flush is conducted by utilizing lubrication system circulation pumps without any modification to normal oil circulation flow paths, except for potential kidney loop filtration. This flush is typically done on a time interval vs. cleanliness (particle levels) basis to facilitate the removal of soluble and insoluble contaminants that would not typically be removed by system filters.

Best practices for high-velocity flushing are as follows:

- Supply and storage tanks should be clean, dry, and odor-free. Diesel flushing is not acceptable.
- Two to three times the normal fluid velocity achieved with external high-volume pumps or by sequential segmentation flushing through bearing jumpers.
- Removal of oil after flush is completed to inspect and manually clean (lint-free rags) turbine lube oil system internal surfaces.
- High-efficiency bypass system hydraulics to eliminate the risk of fine particle damage [5].

4.0 Metrics, Monitoring and Analysis

4.1 Measures of Performance, Condition, and Reliability

In standard ASTM D4378-08 [9], the developed equation for turbine severity, **B**, is as follows:

$$B = M\,(1 - X/100) \,/\, (1 - e^{-Mt/100})$$

Where: **B** is the turbine severity
M is the fresh oil makeup expressed as the percent of total charge per year
t is the years of oil use
X is the used oil oxidation resistance in the Test Method D 2722 rotary pressure vessel text expressed as % of fresh oil

In standard ISO 4406, oil cleanliness levels are defined by three numbers divided by slashes (/). The example below illustrates the use of ISO 4406 code chart.

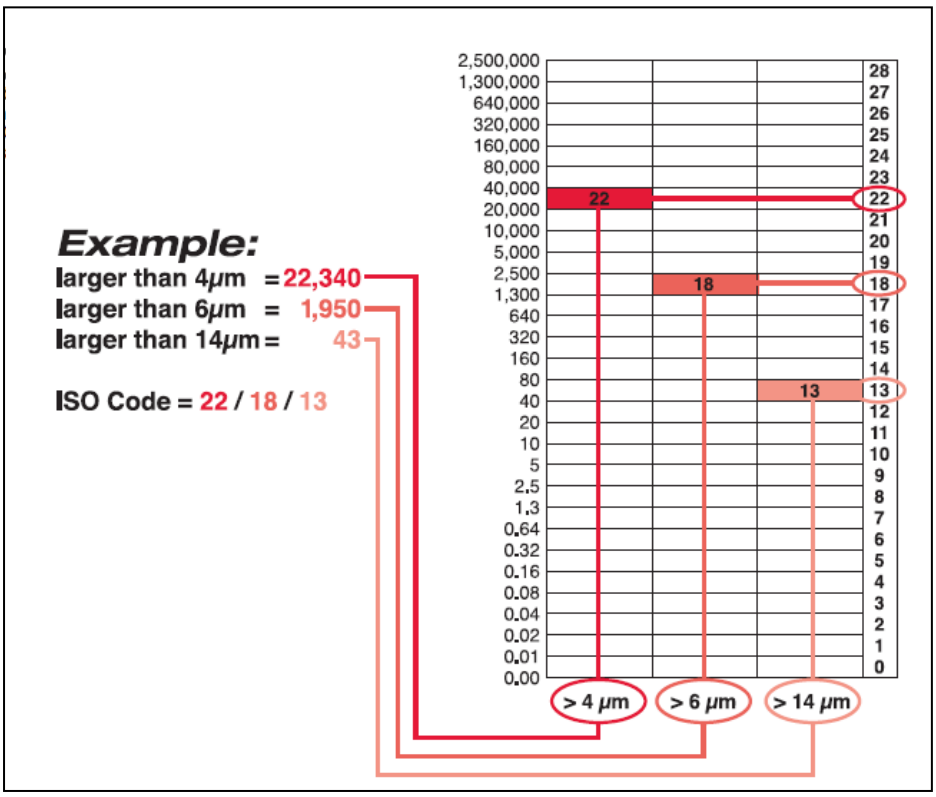

Figure 3: ISO 4406 Code Chart [8]

These numbers correspond to 4, 6, and 14 micron. Each number refers to an ISO Range Code which is determined by the number of particles for that size (4, 6 and 14mm) and larger present in 1ml of oil.

4.2 Analysis of Data

Analysis of test data is defined in standard ASTM D4378-08 [9]. The analysis of data using the oil cleanliness levels from the ISO 4406 [8] are illustrated below:

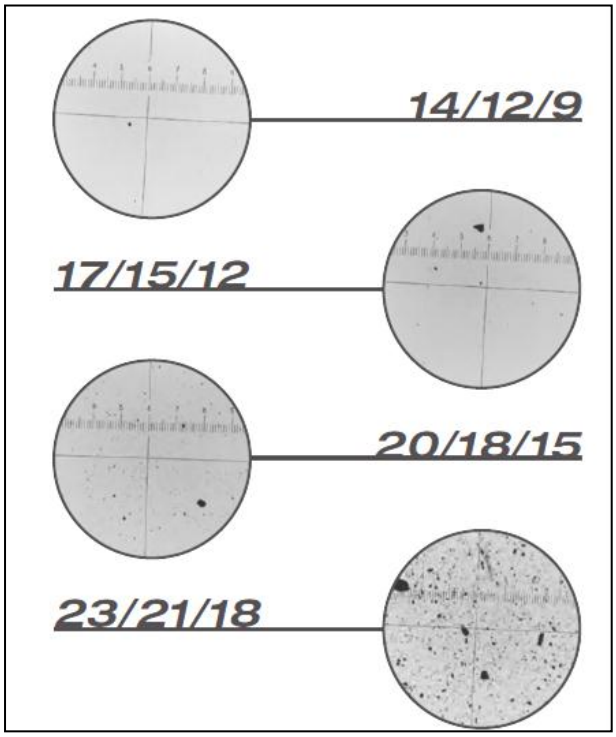

Figure 4: Oil Cleanliness Levels [8]

4.3 Integrated Improvements

Interpretation of test data and recommended actions are defined in ASTM D4378-08 [9]. The integration of the ISO 4406 oil cleanliness levels can be used for the selection and specification of system characteristics and the equipment that it services.

Finding the cleanliness level required by a system

1. Starting at the left hand column, select the most sensitive component used in the system.
2. Move to the right to the column that describes the system pressure and conditions.
3. Here you will find the recommended ISO class level, and recommended element micron rating.

	Low/Medium Pressure Under 2000 psi (moderate conditions)		High Pressure 2000 to 2999 psi (low/medium with severe conditions[1])		Very High Pressure 3000 psi and over (high pressure with severe conditions[1])	
	ISO Target Levels	Micron Ratings	ISO Target Levels	Micron Ratings	ISO Target Levels	Micron Ratings
Pumps						
Fixed Gear or Fixed Vane	20/18/15	20	19/17/14	10	18/16/13	5
Fixed Piston	19/17/14	10	18/16/13	5	17/15/12	3
Variable Vane	18/16/13	5	17/15/12	3	not applicable	not applicable
Variable Piston	18/16/13	5	17/15/12	3	16/14/11	3[2]
Valves						
Check Valve	20/18/15	20	20/18/15	20	19/17/14	10
Directional (solenoid)	20/18/15	20	19/17/14	10	18/16/13	5
Standard Flow Control	20/18/15	20	19/17/14	10	18/16/13	5
Cartridge Valve	19/17/14	10	18/16/13	5	17/15/12	3
Proportional Valve	17/15/12	3	17/15/12	3	16/14/11	3[2]
Servo Valve	16/14/11	3[2]	16/14/11	3[2]	15/13/10	3[2]
Actuators						
Cylinders, Vane Motors, Gear Motors	20/18/15	20	19/17/14	10	18/16/13	5
Piston Motors, Swash Plate Motors	19/17/14	10	18/16/13	5	17/15/12	3
Hydrostatic Drives	16/15/12	3	16/14/11	3[2]	15/13/10	3[2]
Test Stands	15/13/10	3[2]	15/13/10	3[2]	15/13/10	3[2]
Bearings						
Journal Bearings	17/15/12	3	not applicable	not applicable	not applicable	not applicable
Industrial Gearboxes	17/15/12	3	not applicable	not applicable	not applicable	not applicable
Ball Bearings	15/13/10	3[2]	not applicable	not applicable	not applicable	not applicable
Roller Bearings	16/14/11	3[2]	not applicable	not applicable	not applicable	not applicable

1. Severe conditions may include high flow surges, pressure spikes, frequent cold starts, extremely heavy duty use, or the presence of water
2. Two or more system filters of the recommended rating may be required to achieve and maintain the desired Target Cleanliness Level.

Figure 5: ISO 4406 Target Level Chart [8]

5.0 Information Sources:

Baseline Knowledge:

1. EPRI, *Hydro Life Extension Modernization Guides: Volume 4-5 Auxiliary Mechanical and Electrical Systems* TR-112350-V4 – Palo Alto, CA – 2001
2. USBR, *Alignment of Vertical Shaft Hydro Units, Facilities, Instructions, Standards and Techniques Volume 2-1* – Colorado - 2000

State of the Art:

3. Forsthoffer, W., E., *Best Practice Handbook for Rotating Machinery* – 2011
4. McKenna, K., P. E., *Turbines and Their Lubrication -The Engineered Difference*, Spring 2001
5. Hannon, J., B., *How to Select and Service Turbine Oils* - Machinery Lubrication, July 2001
6. ANALYSTS, INC, *Vitalpoint Advanced Fluids Assessment* - Form 40601208 – 2008

Standards:

7. ASTM D4304-06a, *Standard Specification for Mineral Lubricating Oil used in Steam and Gas turbines* -2006
8. ISO 4406 Code, *HYDAC Innovative Fluid Power: Overview Brochure* – 1999
9. ASTM D4378-08, *Standard Practice In-Service Monitoring of Mineral Turbine Oil for Steam and Gas turbines -2006*

It should be noted by the user that this document is intended only as a guide. Statements are of a general nature and therefore do not take into account special situations that can differ significantly from those discussed in this document.

Best Practice Catalog

Governor

Revision 2.0, 07/26/2012

1.0 Scope and Purpose

This best practice for a hydraulic turbine governor addresses the technology, condition assessment, operations, and maintenance best practices with the objective to maximize performance and reliability of the generating units. The primary purpose of the governor is to control the turbine servomotors which adjust the flow of water through the turbine regulating unit speed and power. How the governor is designed, operated, and maintained will directly impact the reliability of a hydro unit.

1.1 Hydropower Taxonomy Position

Hydropower Facility → Powerhouse → Power Train Equipment → Governor

1.1.1 Governor Components

A governor is a combination of devices that monitor speed deviations in a hydraulic turbine and converts that speed variation into a change of wicket gate servomotor position which changes the wicket gate opening. This assembly of devices would be known as a "governing system". In a hydro plant this system is simply called the "governor" or "governor equipment". For a single regulating turbine (Francis and Propeller), a governor is used to start a hydro unit, synchronize the unit to the grid, and load and shut down the unit. For a double regulating turbine (Kaplan), a governor would also add control to the runner blade servomotor which changes the pitch of the runner blades to maintain optimal efficiency of the turbine for a given wicket gate opening. This is usually done through a mechanical cam or digitally through an electronic controller. Double regulating is also used for dual control of a Pelton's nozzle opening and deflector position. This double regulation establishes an exact relationship between the position of the needle valve and the deflector to allow the deflector to intercept the jet of water flow before closure of the needle valve thereby reducing the water hammer effect in the penstock.

A governor is usually not considered as an efficiency component of a hydro unit, except for a Kaplan unit's double regulation of blade angle versus wicket gate position or Pelton needle versus deflector position, which is an important driver for performance and efficiency. For a Kaplan turbine governor, a 2D or 3D cam (or electronic equal) for blade positioning and the Kaplan feedback/restoring mechanism, together supply the double regulating function. The details are described as follows:

<u>Double Regulating Device</u>: The function of the double regulating device for a Kaplan turbine is to provide a predetermined relationship between the blade tilt angle and the wicket gate opening. This is done by a 2 dimensional (2D) or a 3 dimensional (3D) cam. A 2D mechanical cam provides a relationship between blade tilt angle and wicket gate opening. A 3D cam adds the third dimension of head usually by means of an electronic or digital controller. A 2D cam has to be manually adjusted for different head ranges whereas a 3D cam automatically adjusts for head changes.

Kaplan Blade Position Feedback: The restoring mechanism is a "feedback" device that feeds back the current blade tilt angle and the post movement command position to the control system. In a mechanical governor, this is typically a pulley cable system, and with digital governors it may be a linear potentiometer or linear magnetostrictive (non-contact) electrical positioning system.

The non-performance but reliability related components of a governor include the oil pressure system, flow distributing valves, control system, Permanent Magnet Generator (PMG) or speed sensor, control system, wicket gate restoring mechanism, and creep detector. As a note, many references consider the wicket gate servomotors as part of the governor system. However for HAP, the servomotors are considered part of the turbines and are addressed in the turbine best practices.

Oil Pressure System: The oil pressure system consists of oil pump/s, oil accumulator tank/s, oil sump, and the necessary valves, piping, and filtering required. Pressure tanks/accumulators and Kidney Loop filtration systems are not addressed in this best practice document.

Flow Distributing Valves: The distributing valve system varies in design depending on the type of governor. For a common mechanical governor, the system consists of a regulating valve (that moves the servomotors) that is controlled by the valve actuator, which is in turn controlled by the pilot valve. These valves coupled with the oil pressure system provide power amplification in which small low force movements are amplified into movements of the servomotors.

Control System: The control system can be mechanical, analog, or digital depending on the type of governor. In the truest sense, the control system is the "governor". The purpose of all other components in a governor system is to carry out the instructions of the control system (governor). For mechanical governors, the control system consists of the fly-ball/motor assembly (ball-head or governing head) driven by the PMG, linkages, compensating dashpot, and speed droop device.

Speed Sensor: Mechanical governors use a permanent magnet generator (PMG) as rotating speed sensor which is driven directly by the hydro unit. It is basically a multi-phase PMG that is electrically connected to a matching multi-phase motor (ball head motor) inside the governor cabinet that drives the fly-ball assembly (or governing head) which is part of the control system. Analog and Digital governors use a Speed Signal Generator (SSG) driven directly by the unit which provides a frequency signal proportional to the unit speed usually through a zero velocity magnetic pickup monitoring rotating gear teeth or through generator bus frequency measured directly by a Potential Transformer (PT).

Double Regulating Device for Pelton Turbine: Double regulation for a Pelton turbine provides for an exact relationship between the position of the needle valve and the deflector to allow the deflector to intercept the jet of water before closure of the needle valve thereby

reducing any water hammer in the penstock. This is done by a mechanical connection between the needle valve and deflector.

Wicket Gate Position Feedback: The restoring mechanism is a "feedback" device that feeds back the current wicket gate position and the post movement command position to the control system. In a mechanical governor this is typically a pulley cable system, and with digital governors, it may be a linear potentiometer or linear magnetostrictive (non-contact) electrical positioning system.

Creep Detector: The creep detector is a device, usually mounted on the PMG or part of speed sensor, which is capable of measuring very slow shaft revolutions. Its purpose is to detect the beginning of shaft rotation that might occur from leakage of the wicket gates while the unit is shut down. The system detects movement and turns on auxiliary equipment, such as bearing oil pumps, to prevent damage.

In addition to the above devices, some auxiliary equipment associated closely with the governing system and often found in, on, or near the governor cabinet which is not addressed in this Best Practice includes: synchronizer, shutdown solenoid, tachometer, over speed switch, generator brake applicator, governor air compressor, and various gages and instruments. These can vary greatly in design depending on the type of governor or turbine.

1.2 Summary of Best Practices

1.2.1 Performance/Efficiency & Capability - Oriented Best Practices

Performance levels for governors can be stated at three levels as follows:

The Installed Performance Level (IPL) is described by the governor performance characteristics at the time of commissioning. These may be determined from manufacturer shop reports and records from field commissioning tests.
The Current Performance Level (CPL) is described by an accurate set of governor performance characteristics determined by field testing.
Determination of the Potential Performance Level (PPL) typically requires reference to governor design information from the manufacturer.

- The governor performance refers to the ability of off-line and on-line responses, sensitivity to hunting, accuracy of frequency, synchronization time, and the ability to start remotely. These performances can affect the unit generation performance directly or indirectly. One best practice is periodic testing to establish accurate current governor performance characteristics and limits.

- Periodic analysis of governor performance at CPL to detect and mitigate deviations of expected performance from the IPL due to degradation or wear.

- Periodic comparison of the CPL to the PPL to trigger feasibility studies of major upgrades.

- Maintain documentation of the IPL and update when modifications to equipment are made.
- Index testing of Kaplan turbines following ASME PTC 18-2011 [19] must be done periodically (10 year cycle minimum) or after major maintenance activities on the turbine, to establish the best blade angle to the gate opening relationship and update the 2D or 3D cam.

1.2.2 Reliability/Operations & Maintenance - Oriented Best Practices

- Since digital governors are the state of the art technology for hydro turbine governing system, use digital type governor for new installation. They can be either proprietary controllers or controllers based on industrial PLCs.
- Rather than replace the entire governing system it may be more cost effective to retain many of the mechanical components (i.e. pumps, accumulator tank, sump, etc.) and perform a digital upgrade or retrofit.
- As a best practice, use a non-contact linear displacement feedback sensor such as a Magnetostrictive Linear Displacement Transducer (MLDT) rather than a contact sensor such as a linear potentiometer which will wear over time.
- For new governors or retrofits, choose a well known reputable manufacturer that will be around to support the equipment for long term. Use industry acknowledged "up-to-date" choices for governor component materials and maintenance practices.
- Monitor the governor pump cycle time during regulating and shutdown to establish a baseline and trend any increases that may be indicative of internal leakage of the valves or problems with the turbine servomotors. Monitor pump noise and vibration which can be an indication of bearing failures, excessive oil foaming, loose pipe connections, and possible blockage of oil flow. Adjust maintenance and capitalization programs to correct deficiencies.
- Oil tests should show oil cleanliness meeting an ISO particle count of 16/13, viscosity should be within +/-10% of manufacturer's recommended viscosity, metals should be under 100 parts per million (ppm), acid number less than 0.3, and the moisture content should be less than 0.1%. Oil should be tested at a minimum of every 6 months. Compare and contrast the results to establish trends for increases in contamination or decrease in lubricant properties.
- Only lint-free rags should be used to wipe down the vital parts inside a governor since the lint can be a source of oil contamination leading to binding of certain critical control valves.

1.3 Best Practice Cross-references

- I&C - Automation
- Mechanical – Lubrication System
- Mechanical – Francis Turbine

- Mechanical – Propeller/Kaplan Turbine
- Mechanical – Pelton Turbine

2.0 Technology Design Summary

2.1 Material and Design Technology Evolution

The four types of governors that have been used for hydraulic turbines throughout history are: mechanical, mechanical-hydraulic, analog, and digital. The purely mechanical governor is for very small applications requiring little motive force in the actuator and was developed in the late 1800's. Amos Woodward received his first governor patent for controlling water wheels in 1870. A significant improvement occurred in 1911 when Elmer Woodward perfected the mechanical-hydraulic actuator governor adding power amplification through hydraulics [3]. One of the first being a gate shaft type governor as shown in Figure 1. These actuator governors could be applied to very large hydraulic turbines which required large forces to control the wicket gates. They ultimately evolved into the cabinet actuator governor as shown in Figure 2. Analog governors, with electronic Proportional-Integral-Derivative (PID) control functions, which replaced the ball-head, dashpot, and linkages, were developed in the early 1960's. Digital governors (PID through software) were developed in the late 1980's and have advanced with improvements of micro-processor capabilities [1].

Figure 3 shows a block diagram for a single regulating mechanical-hydraulic governor and turbine control system as compared to Figure 4 showing a digital governor. The solid line blocks are part of the governor controls and the dashed line blocks are part of the turbine controls.

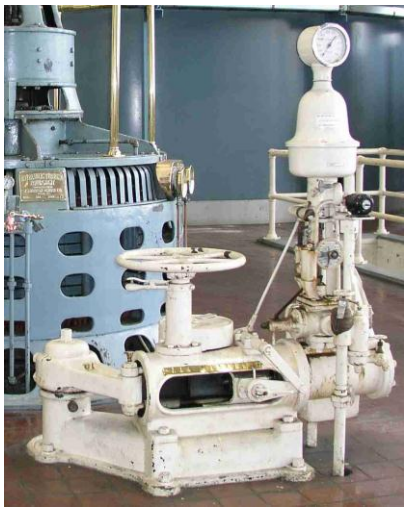

Figure 1: Gate Shaft Governor

Figure 2: Mechanical Cabinet Actuator Governor

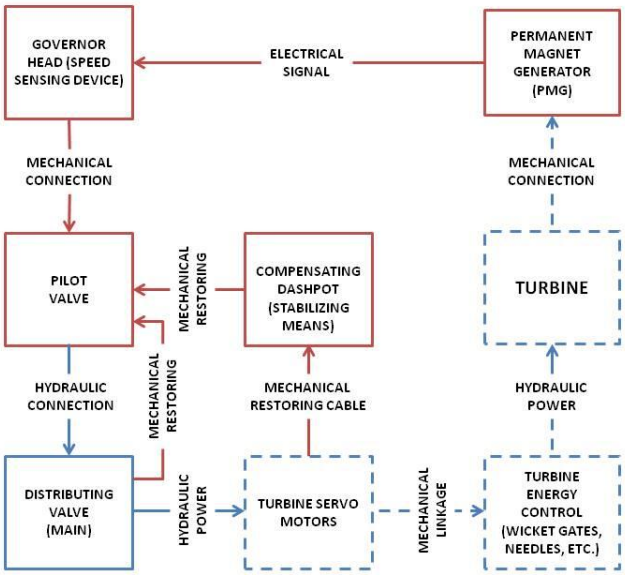

Figure 3: Mechanical-Hydraulic Governor (Solid line) and Turbine Control System (Dashed line) [7]

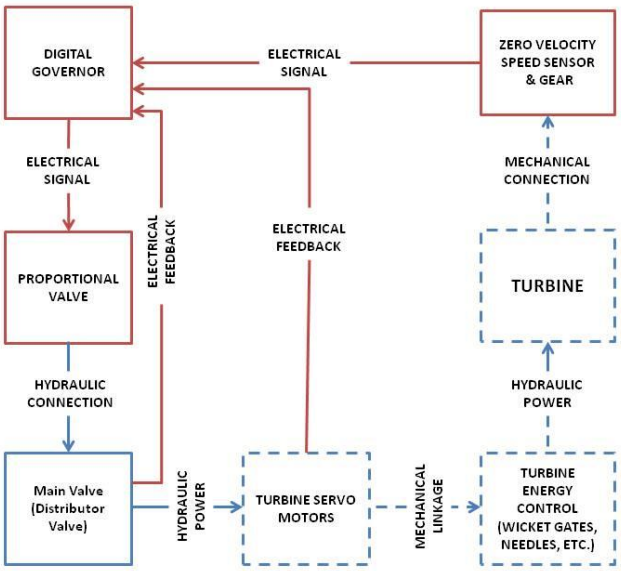

Figure 4: Digital Governor (Solid line) and Turbine Control System (Dashed line)

As a best practice, governors being purchased should be specified according to IEEE 125 [15] and/or IEC 61362 [17].

2.2 State of the Art Technology

Mechanical cabinet actuator governors (Figures 2 and 5) are the dominate type of governors in service today for hydro turbines but are no longer manufactured due to their high cost. Analog governors have more functionality over mechanical governors but still have more hardware components than a modern digital governor [1]. As a result, digital governors, with their lower cost and versatility through software programmability, are the governors of default today for new installations or replacements and are the state of the art technology for hydro turbine governors. Custom proprietary controllers such as that shown in Figure 8 are available, as well as systems based on industrial Programmable Logic Controllers (PLCs).

Figure 5: Mechanical-Hydraulic Governor

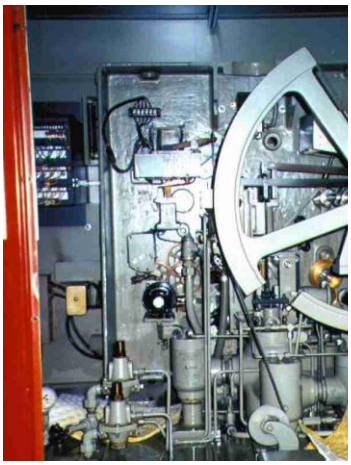

Figure 6: Analog Governor

Figure 7: Proportional Valve - Main Valve Assembly for Digital Governor

Figure 8: Digital Governor

As a best practice, rather than replace the entire mechanical or analog governing system, often a cost effective solution is to retain many of the mechanical components (i.e. pumps, accumulator tank, sump, etc) and perform a digital upgrade or retrofit. This allows the hydro plant to retain the reliability of some of the existing equipment and also retain the familiarity with that equipment while reducing the installed cost as compared to a new governor. The upgrades usually include installing a digital controller (PLC) and electronic speed sensor to replace the mechanical components (PMG, ball-head, linkages, dashpot, etc.) and an analog controller.

In addition, a proportional valve usually replaces the pilot valve and an electronic feedback position sensor replaces mechanical restoring cable. It is possible to add remote communication features, fast on-line ramp rates, out-of-calibration alarms, a touch screen human machine interface (HMI), and many other features not possible with legacy governors [11]. Figure 6 shows an original analog governor and Figures 7 and 8 show the same governor upgraded to digital controls. Figure 9 shows a PMG and associated mechanical speed switches with a speed indicator probe and creep detector on top. Figure 10 shows an electronic speed sensor assembly with zero velocity sensors monitoring a gear.

Figure 9: Top of PMG

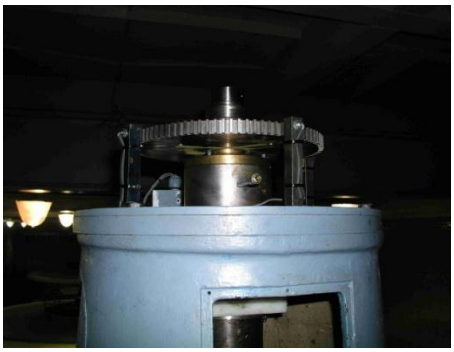

Figure 10: Digital Speed Sensor/s

Figures 11 and 12 show the contrast between a typical wicket gate servomotor mechanical restoring cable for a mechanical governor feedback versus an electronic MLDT for feedback to a digital governor. As a best practice, use a non-contact linear displacement feedback sensor such as a MLDT rather than a contact sensor such as a linear potentiometer which will wear over time.

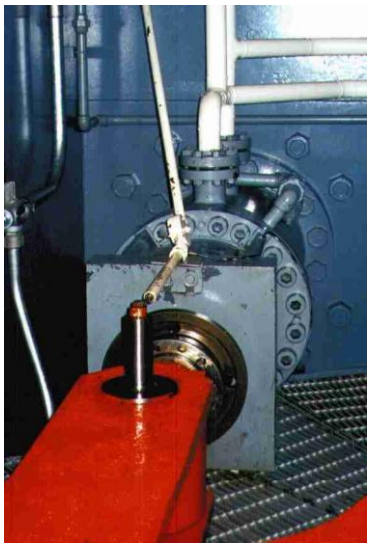

Figure 11: Restoring Cable – Mechanical Feedback

Figure 12: MLDT Electronic Feedback

As a general cautionary note, one should be aware that the product life cycle of digital governors is relatively short, as with most computerized technology of today. Therefore, over time, spare parts can become difficult to procure. The software and the hardware used can be obsolete in as little as 10 years [11]. A best practice would be to choose a well known reputable manufacturer that will be around to support the equipment for long term. Use industry acknowledged "up-to-date" choices for governor components materials and maintenance practices.

3.0 Operation and Maintenance Practices

3.1 Condition Assessment

After commercial operation begins, how the governor is operated and maintained will have a major impact on loss prevention of the IPL and CPL and maintaining the unit reliability. An unforeseen failure of the governor can have a substantial impact on revenues due to the extended forced outage. Therefore, it is important to maintain a current assessment of the condition of the governor and plan accordingly. A condition assessment of a governor system would include the evaluation of the age of the equipment, operating and maintenance history, availability of spare parts, and performance [10].

Using the age of any equipment to assess the condition is very subjective, since how the equipment is operated and maintained over its life will directly affect the wear of its components. However, age is still an important measure of wear of mechanical parts. Just as with electronic parts, as the components age, they may deteriorate from exposure to heat, vibration, and contamination of dirt and oil [10].

Mechanical-hydraulic governors (Figures 1, 2, and 5) are usually very reliable, with the most common problems being oil leakage (external and internal), sticking valves, looseness in pins

and linkages due to wear, and maladjustments. Some leakage is acceptable and provisions are usually made by the manufacturer for normal leakage. A condition assessment would include observation of the leakage and discussion with the hydro plant maintenance technicians as to the amount of daily or weekly maintenance required and any major past repairs. A sign of excessive external oil leakage is usually evident from the observation of extreme use of oil absorbent materials, rags, and catch containers in the governor cabinet. This external oil leakage drains back to the sump bringing with it any dust and dirt that enters the cabinet resulting in contamination of the oil.

A sign of excessive internal oil leakage is a frequent cycle time of the governor oil pump. IEEE 125 [15] and Goncharov [9] recommend that the oil pressure system (pump/s and accumulator/s) should be designed such that the minimum pump cycle is 10 minutes while the governor is controlling steady state. This value factors in internal leakage and the regulating use of the oil. However, even with minimal internal leakage, the pump cycle time will vary greatly depending on whether the unit is shutdown, starting up, regulating (isolated mode will require more than when connected to a stable grid), or shutting down since the amounts of oil use are different at all these different circumstances. For example, the pump may not cycle for 30 minutes, an hour, or longer while the unit is shut down, but may operate continuously while the unit is starting up or shutting down. In any case, the pump/s should be rated for the service that they actually see in service. Some very large governors use a small "jockey pump" which is designed to operate continuously while the unit is operating steady state. So this pump would be rated for continuous service. As a best practice, one should monitor the pump cycle time of the plant governors during regulating and shutdown to establish a baseline and trend increases that may be indicative of internal leakage of the valves or problems with the turbine servomotors. This also allows such trending of pump cycles to be used to compare the governor condition of similar units. Also, one should monitor pump noise and vibration which can be an indication of bearing failures, excessive oil foaming, loose pipe connections, and possible blockage of oil flow [12].

Since the importance of clean oil cannot be understated, any condition assessment should analyze oil test reports to ensure the oil suspended particulate is low and moisture content is low. Excessive metal particulate is a sign of major wear of valve internals (pilot, valve actuator, proportional, or distributor) and should be addressed as soon as possible. As a best practice, results from oil tests should show oil cleanliness meeting an ISO 4406 particle count of 16/13, viscosity should be within +/-10% of manufacturer's recommended viscosity, metals should be under 100 parts per million (ppm), acid number less than 0.3, and the moisture content should be less than 0.1%. Oil should be tested as a minimum every 6 months.

Analog and digital governors (Figures 6, 7, and 8) have mechanical components so they share many of the same maintenance requirements as a mechanical-hydraulic governor. A condition assessment would include the same approach, as stated above, with the mechanical inspection generally limited to the hydraulic governor head assembly which consists of the proportional valve and associated control components [10]. Electronic components should be inspected for any signs of looseness in connections, overheating, and any contamination of dirt or oil on the components. Overheating of the oil in the sump, from an extended unit operation or excessive

internal leakage in the system, can cause the release of oil vapors into the governor cabinet which will condense on the cooler surfaces. Also, oil leakage will increase with oil temperature. This oil vapor condensation can cause major problems with electronic components if they happen to be located within the cabinet.

Any condition assessment should also include an inventory of spare parts. All necessary mechanical and electronic parts required to keep the governor operational should be available in plant inventory or on short notice depending on the criticality of the unit to the system.

The measured performance of a governor is a major indicator for the condition assessment. Performance measures should include off-line and on-line response, sensitivity to hunting, accuracy of frequency, synchronization time, and the ability to start remotely. ASME Performance Test Code, PTC 29 [14] provides the rules and procedures for executing governor performance tests.

3.2 Operations

A mechanical-hydraulic governor for a hydraulic turbine is a simple and reliable device for controlling speed and power output. Stabilization of the unit is provided by a compensating dashpot while the same function is provided electronically or digitally in an analog or digital governor. Governor dead time is defined as the elapsed time from the initial speed change to the first movement of the wicket gates for a rapid change of more than 10 percent of load. The dead time for a mechanical-hydraulic governor is 0.25 seconds whereas the dead time for an analog or digital governor is less than 0.2 seconds which enables to governor to provide accurate stable speed control [2]. Through the operation of a governor, a unit is started up, synchronized to the grid, loaded, and then shut down. Also, its function is coordinated with the operation of various other types of auxiliary equipment in the unit such as lubrication pumps, cooling water pumps, excitation control, brakes, protective relays, and the main generator breaker.

Kaplan turbines are double regulated such that as the wicket gates move the blades tilt to follow a pre-established relationship with wicket gate position and head. This is usually done in a mechanical governor via a 2D cam as shown in Figure 13. More advanced governors with 3D cams (electronic equal), as shown in Figures 14, 15, and 16, monitor head and continually update that relationship via software. As the turbine condition degrades, the efficiency reduces and subsequently the mechanical 2D cam surface may wear [8]. Therefore, as a best practice, index testing following ASME PTC 18-2011 [19] must be done periodically (10 year cycle minimum) or after major maintenance activities on the turbine to establish the best blade angle to the gate opening relationship and update the 2D or 3D cam. An example of the changing of that relationship and setting of a new curve is shown in Figure 1 of the Propeller/Kaplan Best Practice document.

Figure 13: 2D Mechanical Cam

Figure 14: Kaplan Blade Position – Electronic - MLDT

Figure 15: 3D Digital Cam for Blade

Figure 16: 3D Digital Cam Blade Oil Head

3.3 Maintenance

This best practice document does not replace the manufacturer's maintenance manual for servicing the governor. Governor maintenance and adjustments should be performed following the manufacturer's guidelines. A good third party reference for mechanical-hydraulic governor maintenance is the USBR's Mechanical Governors for Hydroelectric Units [5].

Many hydro plants still prefer a mechanical-hydraulic governor over a modern digital governor. Even though mechanical-hydraulic governors are no longer manufactured, parts can be reversed engineered or procured from third party manufacturers. The part technology is static, reliability is proven, and maintenance cost is generally low and established. Also, the maintenance personnel are familiar with the equipment and are trained to maintain and repair the equipment

[1]. However, time and associated wear takes a toll on almost all devices including governing equipment. Electrical and mechanical parts will wear to a point that they have to be replaced. At times, repair parts may be too expensive, obsolete, or not available so the governor has to be replaced or upgraded with new one which is usually digital [6].

Clean oil is the lifeblood of a hydraulic actuated governor. Sticking valves, whether they are pilot valves or distributor valves of a mechanical governor or proportioning valves in a digital governor, is a common symptom of dirty oil. Reconditioning of the oil by routine centrifuging and filtering during routine outages is recommended. As a best practice, many plants connect a kidney loop filtration system to the governor sump to continuously filter the oil, as shown in Figure 17. Such filtration systems are capable of removing particulate and also can remove moisture if designed accordingly.

Figure 17: Kidney Loop Filtration on Sump

Mechanical-hydraulic governors contain sets of delicate and intricate linkages and valves in which if any single component fails it may cause the entire system to malfunction. As a best practice, it is very important to keep the components free from accumulation of dirt and dust and keep the linkages and bearing adequately lubricated with oil [7]. Binding in the linkages and bearings due to lack of lubrication or dirt buildup is a frequent cause of governor trouble. As a best practice, only lint-free rags should be used to wipe down the vital parts since the lint can be a source of oil contamination leading to binding of certain critical control valves. [4].

Analog and digital governor systems have mechanical components that have to be maintained just like mechanical-hydraulic governors. In addition, they have common

maintenance problems such as loose wire and card connections that may vibrate free over time. Any maintenance program as a best practice must include checking and tightening these components periodically to avoid unit trips and forced outages. Since electronic components do fail from time to time, it is imperative to have adequate spare parts on site and the maintenance personnel properly trained to troubleshoot and repair the governor.

If the decision is to retain a satisfactorily operating mechanical-hydraulic governor which is in good condition, there are other maintenance related upgrades and retrofits that can be made to the equipment to provide even higher reliability, such as: electronic 3D cams (for Kaplan blade actuation, see section 3.2), pump un-loader pilot valve kit and oil strainer (Figure 18), electronic speed switch kits, and improved pilot valve strainers (Figure 19).

Figure 18: Pump Un-Loader Pilot Valve & Strainer

Figure 19: Pilot Valve Duplex Strainer

4.0 Metrics, Monitoring and Analysis

4.1 Measures of Performance, Condition, and Reliability

The fundamental performance for a governor is described by the quality of its speed regulation of a hydraulic turbine. This quality can be determined by its performance measures.

The measured performance of a governor is a major indicator for the condition assessment. ASME PTC-29 [14] specifies procedures for conducting tests to determine the following performance characteristics of hydraulic turbine speed governors:

- Droop - permanent and temporary
- Deadband and Deadtime – speed, position, and power
- Stability index - governing speedband and governing powerband
- Step response
- Gain (PID) - proportional gain, integral gain, and derivative gain
- Setpoint adjustment - range of adjustment and ramp rate

A similar international code is IEC 60300 [16].

Index testing of Kaplan turbines following ASME PTC 18-2011 [19], must be done periodically (10 year cycle minimum) or after major maintenance activities on the turbine, to establish the best blade angle to the gate opening relationship.

The condition of the governor can be monitored by the Condition Indicator (CI) as defined according to HAP Condition Assessment Manual [13].

Unit reliability characteristics, as judged by its availability for generation, can be monitored by use of the North American Electric Reliability Corporation's (NERC) performance indicators, such Equivalent Availability Factor (EAF), Equivalent Forced Outage Factor (EFOR), and event reports. Many utilities supply data to the Generating Availability Data System (GADS) maintained by NERC. This database of operating information is used for improving the performance of electric generating equipment. It can be used to support equipment reliability and availability analysis and decision-making by GADS data users.

4.2 Data Analysis

Analysis of test data is defined in ASME PTC-29 [14] and/or IEC 60300 [16]. Basically, determine current performance measurements (CPL). Compare results to previous or original governor test data (IPL) and determine any reduction in performance. Compare results to new governor design data (from governor manufacturer) and determine potential performance (PPL). For the latter, calculate the installation/rehabilitation cost and internal rate of return to determine upgrade justification.

Analyze index test results performed on Kaplan unit to determine if a new 2D or 3D cam (or electronic equal) must be updated.

Monitor the governor pump cycle time during regulating and off-line to establish a baseline and trend any increases that may be indicative of internal leakage of the valves or problems with the turbine servomotors.

Monitor the condition of the oil through periodic testing and compare the results to establish trends for any increase in contamination or decrease in lubrication properties.

The condition assessment of a governor is quantified through the CI as derived according to HAP Condition Assessment Manual [13]. The overall governor CI is a composite of the CI derived from each component of the governor. This methodology can be applied periodically to derive a CI snapshot of the current governor condition such that it can be monitored over time and studied to determine condition trends that can impact performance and reliability.

The reliability of a unit as judged by its availability to generate can be monitored through reliability indexes or performance indicators as derived according to NERC's Appendix F, Performance Indexes and Equations [18]. Event reports can be analyzed for outages or deratings by equipment cause codes to ascertain the impact of governor related events (governor cause codes 7050 and 7053).

4.3 Integrated Improvements

Periodic index test results should be used to update the Kaplan 2D or 3D cams to maximize efficiency of the turbine.

Projects such as digital governor conversions, retrofits, mechanical upgrades that are justified by a poor CI or poor reliability indices should be implemented.

As the condition of the governor changes, the CI and reliability indices are trended and analyzed. Using this data, projects can be ranked and justified in the maintenance and capital programs to bring the governor back to an acceptable condition and performance level.

5.0 Information Sources

Baseline Knowledge:

1. ASME, The *Guide to Hydropower Mechanical Design*, HCI Publications Inc., 1996
2. Elliott, Thomas C., *Standard Handbook of Powerplant Engineering*, McGraw Hill Publishing, 1989
3. Woodward Governor Company, *The Woodward Way*, 1977
4. Creager, William P., *Hydroelectric Handbook*, John Wiley & Sons, 1950
5. USBR, FIST Volume 2-3, *Mechanical Governors for Hydroelectric Units*, September 1990
6. Woodward Governor Company, *Top Performance Through Conversion*, Bulletin 09026
7. Woodward Governor Company, *Equipment Maintenance Practices*, Bulletin PMCC-24
8. EPRI, *Increased Efficiency of Hydroelectric Power*, EM 2407, June 1992
9. Goncharov, A., *Hydropower Stations – Generating Equipment*, Moskva, 1972

State of the Art

10. US Corps of Engineers, *Hydro Plant Risk Assessment Guide*, September 2006
11. Clarke-Johnson, R., & Ginesin, S., *Overhaul or Upgrade: Governor Decision Factors*, HydroVision 2007
12. Fox, A., *Governor Oil Pump Condition Assessment*, HydroVision 2008
13. *HAP Condition Assessment Manual* 2012, prepared by ORNL, Mesa and HPPi

Standards:

14. ASME PTC 29- 2005, *Speed-Governing Systems for Hydraulic Turbine-Generator Units*
15. IEEE 125, 2007, *Recommended Practice for Preparation of Equipment Specifications for Speed-Governing of Hydraulic Turbines Intended to Drive Electric Generators*
16. IEC 60308, 2005, *International Code for Testing of Speed Governing Systems for Hydraulic Turbines*
17. IEC 61362, 2000, *Guide for Specification of Hydraulic Turbine Control Systems*
18. NERC, Appendix F, *Performance Indexes and Equations*, January, 2011
19. ASME PTC 18-2011, *Hydraulic Turbines and Pump-Turbines*,

It should be noted by the user that this document is intended only as a guide. Statements are of a general nature and therefore do not take into account special situations that can differ significantly from those discussed in this document.

Best Practice Catalog

Control/Shut-Off Valves

Revision 2.0, 07/30/2012

1.0 Scope and Purpose

Major Valve Applications in Hydropower facilities

There are various applications of valves in hydropower facilities. It is necessary to first describe different types of major valves to clarify the scope of this best practice document. Based on the functions and services that valves provide, the major valves in a hydropower facility can be categorized as shut-off valves, energy dissipating valves, flow control valves, pressure control valves, air/vacuum valves, and bypass valves. Their functions and major features are addressed as follows:

(1) Shut-off valves (closure valves) – These valves are often installed at the downstream end of a conduit or penstock, e.g., the inlet of the turbine scroll case. The turbine inlet valve is used to shut off water supply to the turbine allowing turbine dewatering for inspection and maintenance without dewatering the penstock. This feature is desirable for long penstocks and high-head cases, particularly when two or more units share a common penstock. This turbine inlet valve is also used to cut off the water flow and stop the unit when the wicket-gates fail to close, particularly during an emergency situation such as load rejection or wicket-gate malfunction. Butterfly valves, spherical valves, and cone valves are the most commonly used turbine closure valves in medium-large scale hydro plants. Butterfly valves are used for the heads up to 122 meters (400 feet). Spherical valves are used for heads up to 1200 meters (4000 feet). Cone valves can be used for heads up to 1750 meters (5700 feet).

(2) Energy dissipating valve – Water may be released from a reservoir through low level outlet(s) for reservoir level control, downstream water demands, or minimum stream flow requirements. Efficient energy dissipating valves were developed to improve the operating characteristics and lessen stringent stilling basin requirements. Fixed-cone dispersion valves are often used for controlling free discharge for heads up to 300 meters (1000 feet). Sleeve valves used to dissipate the head in a closed system without cavitation damage (for heads up to 30 meters).

(3) Flow control valves – For large water conduits, energy-dissipating valves control the flow of water while simultaneously breaking the head in the releases. Fixed-cone dispersion and hollow-jet valves are used to control releases from low-level outlets, while sleeve valves are used for flow control in “in-line” piping systems. The flow control valves are also used to regulate the flow of water to the runner in impulse-type hydroelectric turbines (needle valves, as one part of Pelton turbine, are not discussed in this BP). Although shut-off valves may be used to throttle flow, they are normally not designed for continuous flow rate control.

(4) Pressure control valves – Pressure control valves can be further categorized as pressure-relief, pressure-regulating, and pressure-regulator valves. The pressure-relief valve opens when the pressure acting on the valve reaches a preset value. It is often used as safety device on air pressure tanks and on governor pressure set accumulators. Pressure-regulating valves are often used to provide a regulated (constant) pressure source of air, oil, or water in hydro facilities by reducing their openings as upstream pressure rises. For example, when the

penstock or unit inlet is the source of the powerhouse cooling water, a pressure-regulating valve could be used to reduce the inlet pressure to the required cooling water system pressure. The pressure-regulator valve is applied for transient control which opens to discharge the penstock flow simultaneously with rapid wicket gate closure. This permits the penstock flow to remain relatively constant during the load rejection. Flow control valves are commonly used for pressure-regulator service.

(5) Air/Vacuum valves – They are provided in piping systems to exhaust air from a penstock system or spiral case or to fill a vacuum to prevent conduit collapse.

(6) Bypass valves – They are applied where water is conveyed around a turbine, powerhouse, or dam. Energy-dissipating and pressure-regulator valves are often used in bypass piping lines. Needle valves and other valve types are also used in bypass lines to balance the pressure across large butterfly or spherical valves before they are opened or closed. [1]

Scope and Purpose of This Document

Smaller valves, within common mechanical piping systems, can be used in an array of applications. This document focuses on the major valves typically applied in power water conveyance systems at conventional hydropower plants. Therefore, this best practice will only look at the shut-off valves installed at penstocks or power water conduits, including butterfly valves, spherical valves, cone valves, and knife gate valves. This document addresses their technology, condition assessment, operations, and maintenance best practices with the objective to maximize performance and reliability.

1.1 Hydropower Taxonomy Position

Hydropower Facility → Water Conveyance → Control/Shut-off Valves

1.1.1 Butterfly Valve Components

Butterfly valves use a disc that rotates ninety degrees to open and close the valve. Performance and reliability related components of a butterfly valve consist of the valve body, valve seal, and the disc.

Figure 1: Butterfly Valve Example

Valve Body: The valve body's purpose is to house the disc and attach the valve to the piping system. Typically, the body has flanged connections to facilitate dismantling.

Valve Seat: The valve seat is on the contact portion of the valve body and is usually made of flexible materials such as rubber or nylon or metals like bronze or stainless steel. The purpose of the seat is to seal the valve to prevent leakage through the valve when closed. In high performance butterfly valves, the seat is offset from the shaft, therefore not penetrated by the shaft. In triple-offset high performance butterfly valves, metal seats may be used. In the triple-offset design, the seal contacts the seat only at the fully closed position without rubbing.

Disc: The function of the disc is to control the amount of water running through the pipe. Because the disc is always present in the flow, there will always be a head loss across the valve, even when the valve is fully open.

1.1.2 Spherical Valve Components

Spherical valves are valves that use a rotor shaped like a ball to stop or start the flow of fluid. When the valve is opened, the ball rotates so the hole through the ball is in line with the valve body inlet and outlet. When the valve is shut, the ball is rotated so the hole is perpendicular to the flow openings of the valve body and flow stops. Performance and reliability related components of a spherical valve consist of the body, rotor, and the seals.

Figure 2: Spherical Valve Example

Body: The function of the body is to house the rotor and connect the valve to the rest of the piping. The body is typically made of two or more flanged sections.

Rotor: The rotor has a cylindrical hole through it which controls the flow through the valve. When open, the rotor is parallel to the flow direction leaving the flow completely unrestricted. To cut off the flow through the valve, the rotor is turned 90° perpendicular to the flow.

Seals: The seals reduce leakage through the valve. Spherical valves are recommended to have both upstream and downstream seals where the downstream seal is the service seal. The upstream seal is used for maintenance such as replacing the service seal. Typically, the seals are actuated with penstock water pressure.

1.1.3 Cone Valve Components

Cone valves are similar to spherical valves in that they have a plug which contains a full-bore passage when open. The plug is cone shaped and is lifted from the seats and turned ninety degrees to actuate. Metal-to-metal seats are standard.

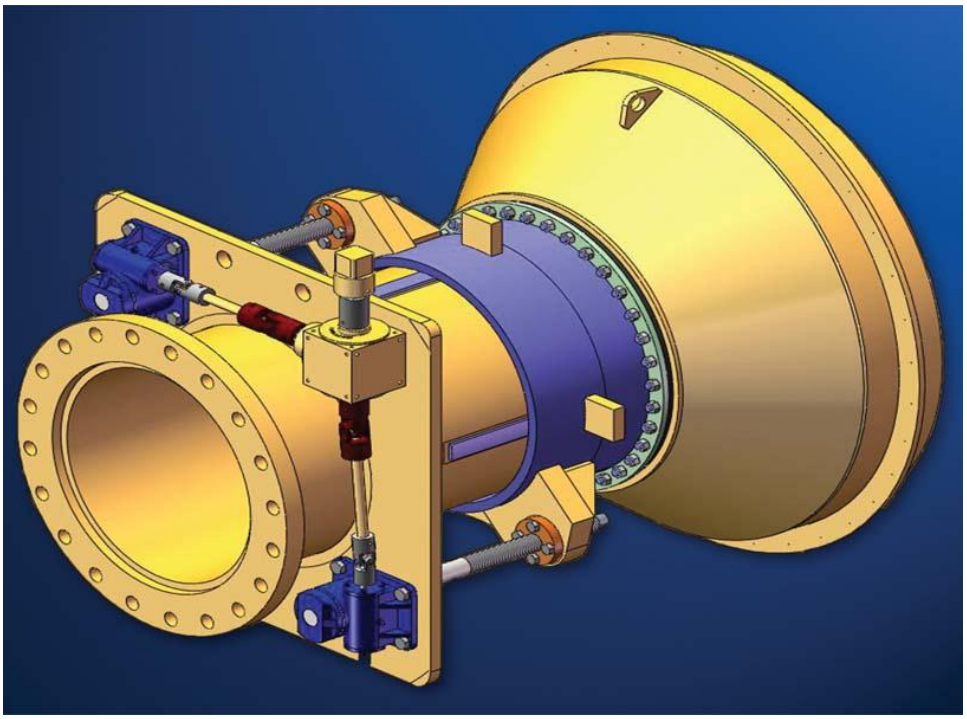

Figure 3: Cone Valve Example

Performance and reliability related components of a cone valve consist of the body, plug, and the seals.

Body: The function of the body is to house the plug and connect the valve to the rest of the piping. The body is typically cast of iron or steel. The body contains two seat rings.

Plug: The plug is cast in the shape of a frustrum of a cone and has a full bore passage with seats which mate to the body in either the open or closed position.

Operator: (not shown in Figure 3): The operator may be manual, electric powered, hydraulic powered, or pneumatic powered.

1.1.4 Knife Gate Valve Components

Knife gate valves use a plate which moves linearly into and out of the flow path to close and open the valve.

Figure 4: Knife Gate Valve Example

Performance and reliability related components of a knife gate valve consist of the body, gate, seats, packing, and operator.

Body: Valve bodies are typically cast stainless steel up to 24" and fabricated in larger sizes. Wafer and lugged (shown in Figure 4) bodies are available. End to end dimension is small compared to spherical and cone valves.

Gate: The gates are fabricated from plate with edges and surfaces finished for sealing at the packing and seats.

Seats: Seats are where the gate meets the body when closed and can be metal, which can leak a small amount or resilient which are designed to be drip-tight.

Packing: Packing are the seals around the gate where the gate exits the body. Packing and packing gland are relatively large on a non-bonneted valve as shown in Figure 4. Bonneted valves are available which fully enclose the gate, including when the valve is open, and only the operating stem must be sealed. Rising stem and non-rising stem designs are available.

Operator: Manual, electric, hydraulic, and pneumatic actuation is typical.

1.2 Summary of Best Practices

1.2.1 Performance/Efficiency & Capability-Oriented Best Practices

- As an integral part of the penstock, routine monitoring of head loss through penstocks includes valves.
- Routine monitoring to ensure that valves are in the correct position, e.g., fully open when intended and fully closed when intended.
- Routine monitoring to ensure that valve actuators function, and time to open and close is as specified.
- Maintain documentation of Installed Performance Level (IPL) and update when modification to equipment is made.
- Include industry acknowledged "up to date" choices for valve components' materials and maintenance practices.

1.2.2 Reliability/Operations & Maintenance-Oriented Best Practices

- Develop a routine inspection and maintenance plan.
- Regularly inspect joints for leakage.
- Valves should be used within the specified pressure-temperature range. Spherical valves are capable of entrapping fluid in the internal cavity which if heated can cause a rise in pressure. It must be ensured that in this condition, the pressure in the valve does not exceed the rated pressure for the attained temperature.

1.3 Best Practice Cross-references

- I&C - Automation
- Civil – Penstocks and Tunnels
- Mechanical - Lubrication System
- Electrical - Generator
- Mechanical – Governor
- Mechanical – Raw Water System

2.0 Technology Design Summary

2.1 Material and Design Technology Evolution

Butterfly valves are from a family of valves called quarter-turn valves and it derives its name from the way that a “butterfly-shape image” appears to form as it turns. The "butterfly" is a metal disc mounted on a shaft. When the valve is closed, the disc is turned so that it is tightly pressed against the seats sealing off the passageway. When the valve is fully open, the disc is rotated a quarter turn so that it allows an almost unrestricted passage of the process fluid. The valve may also be opened incrementally to regulate flow. Unlike a ball valve, the disc is always present within the flow; therefore a pressure drop is always induced in the flow regardless of valve position [3].

Resilient seated butterfly valves were developed first. High performance butterfly valves in which the shaft and seat are offset were the next. Triple-offset high performance butterfly valves are the most advanced design. Triple-offset butterfly valves are utilized for high pressure and temperature conditions and can have resilient or metal seats.

Spherical valves are specialty items typically designed for the individual application. They are made for high pressure, high velocity, and large diameter applications found in hydroelectric facilities.

Spherical valves, on the other hand, have not been around nearly so long. A spherical ball-type, all-brass valve patented in 1871 led to the invention of the modern ball valve. Unfortunately, the valve was not successful and was not even mentioned in valve catalogs of the late 1800s. Nearly 75 years later, the first resilient seated ball valve patent was issued in April 1945. However, ball valves were not commercially available until the late 60s [6].

2.2 State of the Art Technology

In order to enhance the performance of valves, computer aided design (CAD) software is now used throughout the design process. Companies utilize top-of-the-line solid modeling software and finite element analysis programs to calculate stress and deflection of the valve components. With this information, developers can include proper relief and stress factors to assure a long valve life.

Another advantage to CAD software is that it can then be loaded onto a computer numerical controlled (CNC) machine. These machines can fabricate valves with tremendous precision and consistency.

3.0 Operation and Maintenance Practices

3.1 Condition Assessment

After the commercial operation begins, how the valves are operated and maintained will have a huge impact on maintaining reliability. Condition assessment of the valves must address any past damage, location of damage, and repeat damage.
Typical valve distresses include the following:

- Shaft assembly wear, indicated by displacement between the shaft and bushing
- Seal condition
- Corrosion, usually caused by environmental factors, is suggested by loss of steel
- Cracking, found during dry inspection
- Abnormal noise/jumping/vibration, discovered during valve operation [7]

For spherical valves, close attention should be given to the condition of the seals.

3.2 Operations

Butterfly valves cause a head loss in the flow through the valve. Head loss increases as design pressure or head increases because the disc and shaft size increase with pressure. Although head can be significantly reduced across partially open butterfly valves, prolonged throttling operation is not recommended as it can result in cavitation damage to the disc, seal, or body [1].

On spherical valves, moveable seals reduce leakage when the valve is closed. Valve opening and closing sequencing controls should preclude seal damage by valve rotation when seals are extended. It is recommended that spherical valves have both upstream and downstream seals. The upstream seal should be used as the maintenance/emergency seal and the downstream seal should be used as the service/working seal.

Rapid valve closure can result in damaging pressure transients. Opening/closing times and operating pressures should be recorded for future testing comparison.

During plant operations, it is important to routinely inspect the exterior surfaces of valves for signs of leakage while the valves are under hydrostatic pressure. If any leaks are discovered, the source should be promptly identified and repair performed.

3.3 Maintenance

In order to avoid valve failure during operation, all valves should be periodically inspected to determine wear of the components and parts replaced accordingly. The working conditions and location of the valves should determine the frequency of the inspection and maintenance. The valve manufacturer should have information on how to best maintain their valves.

For spherical valves equipped with both upstream and downstream seals, the upstream maintenance seal allows replacement or maintenance of the working seal when the valve is closed under full pressure. However, the upstream seal should have a positive mechanical locking system on the seals to prevent accidental opening while working on the downstream seal [1].

4.0 Metrics, Monitoring and Analysis

4.1 Measures of Performance, Condition, and Reliability

For shut-off valves, the measure of performance is a direct result of their functionality. The purpose of the valves is to stop the flow of water and keep water away from the portions of the system being isolated. Each valve and its associated actuator must be able to fully open and close within the intended time.

Plant efficiency is not greatly affected by shut-off valves because the valves are normally a small fraction of the total water delivery system. It is important that these valves function properly not necessarily for efficiency, but for safety. Equipment and workers performing tasks in dewatered portions of the plant must be protected. Valve leakage can be tolerated as long as safety and equipment protection are not compromised.

Leakage rates should be measured and recorded. Large valves, even those designed to be drip tight when they are new, may leak after years of service.

4.2 Data Analysis

Leakage through shut-off valves can be tolerated as long as equipment protection and safety are not compromised. Relatively small amounts of leakage can be tolerated and handled by pumping water out of areas where maintenance will be performed. However, if pumping becomes excessive, the cost of new seals or other corrective actions may be justified.

4.3 Integrated Improvements

The field test results for leakage and actuator stroke time should be included when updating the plant's unit performance records. These records shall be made available to all involved personnel and distributed accordingly for upcoming inspections.

5.0 Information Sources:

Baseline Knowledge:

1. ASME, *The Guide to Hydropower Mechanical Design*, HCI Publications Inc. - 1996

State of the Art:

2. Integrated Publishing, *Valve Types: http://www.tpub.com/fireman/69.htm* - 2011
3. Grundfos.com, *Butterfly Valve*: http://www.cbs.grundfos.com/CBS_Master/lexica/AC_Butterfly_valve.html - 2011
4. Konigsmark, H., *A Review of Butterfly Valve Components and Operation*: ChemicalProcessing.cpm http://www.chemicalprocessing.com/articles/1998/300.html - 2011
5. Sundaram, K., *Why a Butterfly Valve*, Piping and Valve Engineering: http://piping-valves.blogspot.com/2008/06/why-butterfly-valve.html - 2011
6. Mayer, J., *Ball Valve History and Mystery*: EzineArticles.com. http://ezinearticles.com/?Ball-Valve-History-and-Mystery&id=123681 - 2011
7. REMR Technical Note OM-MS-1.11, *REMR Management System for Tainter and Butterfly Valves:* http://www.wes.army.mil/REMR/pdf/om/ms-1-11.pdf - 2011

Standards:

8. ASME B31.1-2010, *Power Piping ASME Code for Pressure Piping* - 2010
9. ASME B16.34-2009, *Valves-Flanged, Threaded, and Welding End* - 2009

It should be noted by the user that this document is intended only as a guide. Statements are of a general nature and therefore do not take into account special situations that can differ significantly from those discussed in this document.

Best Practice Catalog

Raw Water System

Revision 2.0, 07/30/2012

1.0 Scope and Purpose

This best practice addresses the technology, condition assessment, operations, and maintenance best practices for raw water systems focusing on cooling raw water with the objective to maximize performance and reliability. The raw water cooling system is a once–through (open loop) system in which water flows are discharged back to the tailwater. The primary purpose of the raw water system is to supply water sources to any or all of the following cooling and other water systems:

- Turbine and generator bearing coolers
- Turbine shaft seal
- Generator air coolers
- Generator fire deluge
- Transformer and/or exciter coolers
- Heating, ventilation, and air conditioning
- Service Water
- Source for potable water treatment equipment
- Fire protection [1]

1.1 Hydropower Taxonomy Position

Hydropower Facility → Powerhouse → Power Train Equipment → Balance of Plant/Auxiliary Components → Raw Water System

1.1.1 Raw Water System Components

The raw water system is critical to unit operation in its global plant cooling function. The reliability related components of raw water systems include the supply intake, strainers, pumps, valves, generator air coolers, piping, and instrumentation/monitoring. The raw water system is fed either from the units' forebay, penstock, or scroll case or pumped from the tailrace/tailwater. Tailrace/tailwater is normally the source for lower head plants. Forebays, penstocks, or scroll cases are normally the source for higher head plants. The water source is therefore defined as either gravity or pumped type cooling system. In all plants an intake for unit cooling sealing and lubrication water is provided for each unit with the supply lines between units manifold or cross-connected for flexibility.

Figure 1 is a typical schematic of the raw water system showing the comprehensive nature as it services a wide variety of other hydropower systems.

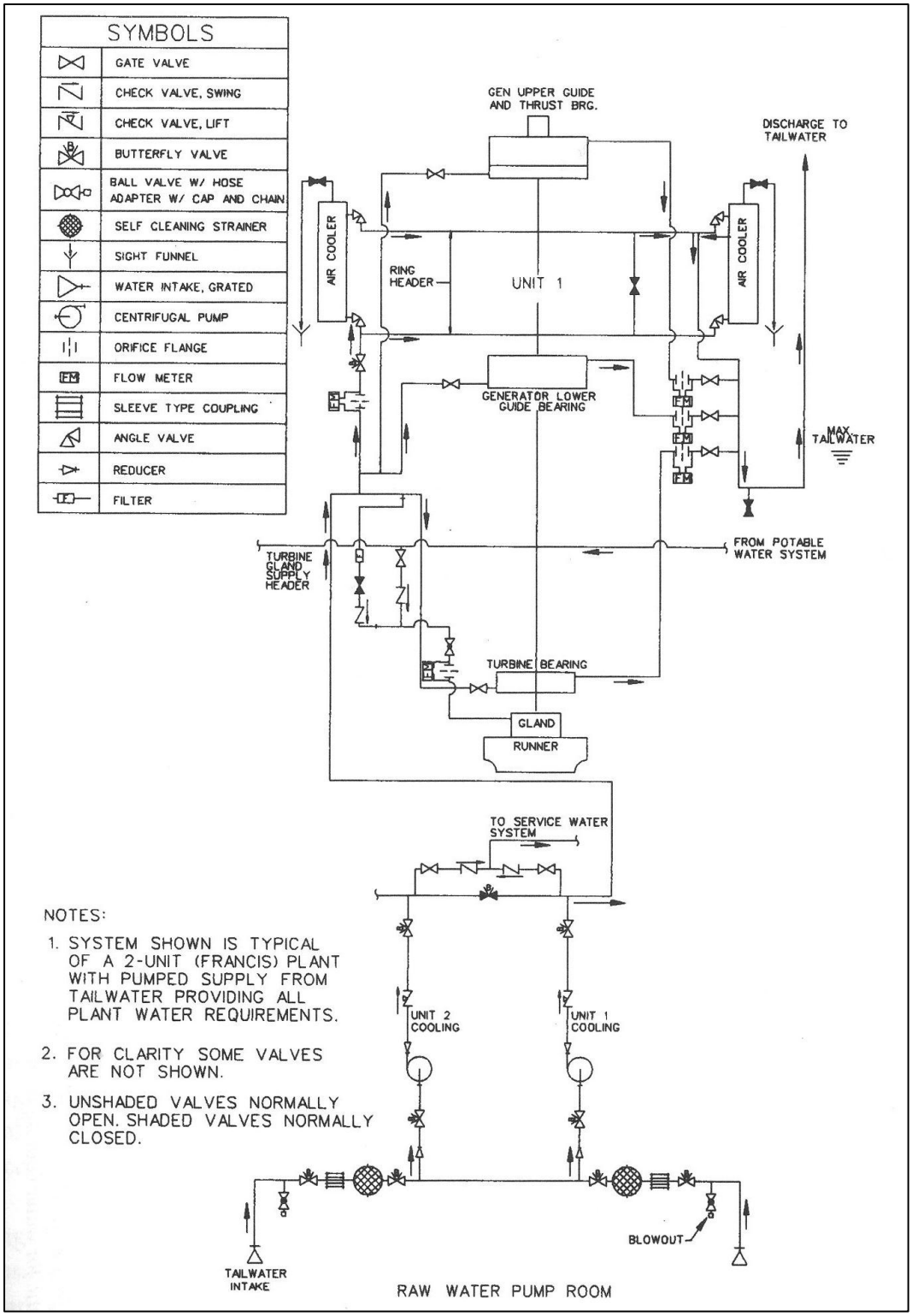

Figure 1: Typical Raw Water System Piping Schematic [2]

Supply Intake: The function of the supply intake is to feed the raw water system with river, dam, or untreated water. Unit cooling, lubricating, and sealing water pressure is usually supplied at a maximum pressure of 40 pounds per square inch (around 28 m of water) to prevent damage to the generator air coolers and other equipment.

Strainers: The function of the strainer is to remove suspended solid material (wood, rocks, sand, biological matter, etc.) from the raw water to minimize fouling of the generator air coolers and oil cooler heat exchangers. The strainer must be back flushed when the differential pressure across the strainer reached a set point value to ensure the raw water flow rate is not reduced due to blockage of the strainer.

Pumps: The function of the raw (cooling) water pumps, if so equipped, is to develop sufficient flow and head to meet the requirements of the equipment it services. This ensures the water in the piping, strainer, valves, and air coolers will be supplied at required flow and pressure. The design must allow for the operation of the raw water component in a fouled condition. Higher head plants/units normally do not require pumps.

Valves: The function of the valves within a raw water cooling system is to route, regulate, or isolate as required the flow of water. There are multiple types of valves and designs based on their specific application. Chief among these are gate, butterfly, globe, control, ball, and check valves. In high head plants pressure must be reduced by pressure regulating valves for most raw water services. A relief valve on the low-pressure side of each pressure regulating valve protects against piping or equipment damage which might result from over pressurization resulting from faulty operation of the valve. A proportioning valve is used to control the flow of cooling water to the generator air coolers.

Generator air coolers: Generator air coolers, which are considered as part of the generator, are heat exchangers located in the generator air housings which employ raw water to cool circulating air which in turn cools the generator. Cooling water is delivered to a header serving all air coolers. This header is sized by the generator manufacturer to distribute approximately equal flow to each cooler. From the air cooler, water returns via another header to a discharge chamber designed to keep the air coolers full of water at all times. The cooling water headers are normally circular.

Piping: The function of the piping is to connect supply water from the forebay/ penstock/scroll case/tailwater to the rest of the system at the design water flow rate and pressure to achieve optimum cooling of system components.

Instrumentation/Monitoring: The function of the instrumentation is to measure, monitor, and regulate the process variables of the raw water such as flow, temperature, and pressure. Pressure indicators, flow meters, temperature indicators, differential pressure transmitters, and/or sightglasses are examples of key instruments.

1.2 Summary of Best Practices

1.2.1 Performance/Efficiency & Capability - Oriented Best Practices

- Refer to the associated best practices for generators, turbines, and transformers that are served by the raw water system.

1.2.2 Reliability/Operations & Maintenance - Oriented Best Practices

- Follow the best practices in the Best Practice Catalog - *Trash Racks and Intakes* for the raw water supply.
- Use Remote Operated Vehicle (ROV) for internal condition inspection on large pipes (diameter > 4”).
- Install isolation valves at selected locations for raw water pipelines so key equipment can be isolated and removed for internal inspection as necessary.
- Develop, implement, and maintain a raw water instrumentation calibration and verification program for instrumentation such as generator air cooler thermocouples, flow meters, and proportioning valve controllers and differential pressure gages.
- When replacing raw water piping, select materials such as carbon steel or stainless steel for construction of generator cooling water parts and base decisions on specific generating units requirement (such as water quality and plant economics).
- Observe the strainer unit. It will give the operator a good indication of the quality of the raw water supply.
- Operate centrifugal pumps within the Equipment Reliability Operating Envelope (EROE) to achieve maximum Mean Time between Failures (MTBF).
- Change impeller diameter, if required, to ensure that every raw water centrifugal pump operates inside its EROE.
- Keep EROE range between (+)10% to (-)50% in flow from the pump best efficiency point.
- Keep raw water centrifugal pump curves in the control room. Operators should be trained and instructed on their use for optimizing centrifugal pump safety and MTBF.
- Monitor the raw water pump flow range by inputting the pump shop test curve and collecting transmitter signals (inlet pressure, discharge pressure, and flow) into spreadsheets to calculate the pump head and flow.
- Adjust head of the raw water supply as required to facilitate the pumps operation within the EROE.

- Label raw water system piping with colored tape to help personnel to understand system operation and how to take corrective action quickly to prevent unit performance or availability issues.
- Installation of raw water strainers with automatic backwash capabilities will reduce labor intensity associated with maintaining acceptable strainer pressure differentials especially at locations that are not continuously staffed.
- Place a higher priority on removal of generator air cooler bio-fouling than the bio-fouling of the raw water pipe unless it has reduced the flow to a level below the design flow.

1.3 Best Practice Cross-references

- I&C - Automation
- Mechanical – Francis Turbine
- Mechanical – Propeller/Kaplan Turbine
- Mechanical – Pelton Turbine
- Electrical – Generator
- Civil – Trash Racks and Intakes

2.0 Technology Design Summary

2.1 Material and Design Technology Evolution

Early designs for raw water systems consisted mainly of carbon steel and cast iron pipe fittings, pumps, valves, and other fixture components. Controls and instrumentation were rudimentary, analog, and predominately manually operated. Piping embedded in concrete was cast iron with bell and spigot joints requiring leaded joints at connection points with external piping. Piping insulation where used contained asbestos fibers.

Valves used for isolation and routing were predominately manually operated gate or globe type valves. Air-operated, thermostatically controlled proportioning valves were used to regulate flow through the generator air coolers to control generator temperature. A manually operated, single strainer served the entire raw water system. For lower head plants, centrifugal pumps were used to provide forced circulation to generator air and oil coolers.

Generally few provisions were made for back-flushing air or oil coolers. Water for fighting fires was provided by elevated storage tanks. Fire protection systems were manually actuated.

2.2 State of the Art Technology

The basic design concepts for raw water systems at hydro plants have not changed substantially. However, there are a number of component design improvements for raw water systems that have become state of the art. Most of these changes have been driven by technical improvements in construction materials and material cost such as stainless steel and copper/copper alloys.

Construction material selection for raw water piping systems and components is based on the specific characteristics of the system such as the water quality of the raw water supply (suspended solids, tendencies to scale, potential bio-fouling, potential for corrosion, etc.). Exposed, large bore piping (diameter > 4”) can be flanged or butt welded carbon steel or stainless steel. Flanged piping allows disassembly of piping systems for cleaning out internal build-up. Small bore piping is made from non-corrosive materials such as stainless steel. Embedded piping is stainless steel or cement lined ductile iron (for larger bore piping) with flanged joints for external piping connections.

Valves larger than 6” in diameter are normally gate valves. Isolation valves (2½” to 6” diameter) are normally butterfly valves. Stainless steel ball valves are normally used for 2” diameter and smaller valves. Valves are manually operated or automated based on the process requirements, staffing levels, etc. Closed cell foam piping insulation systems which eliminate external piping condensation have replaced systems containing asbestos. Raw cooling water pump design has been changed very little over time. However, mechanical seals have replaced packing glands. Advances in pump construction materials, impeller design and manufacturing, and more efficient motor design provide improvements in pump reliability and operating costs. See Figure 2 for a modern raw water pump set-up.

Figure 2: Typical Dual Raw Water Pump Set-Up

Current raw water system designs include stainless steel duplex automatic backwash strainers (Figure 3). Subsystems such as turbine seal water and fire protection can be equipped with finer mesh automatic backwash strainers for additional reliability. These automated features are used as labor saving methods and are especially suitable for facilities that are not continually staffed.

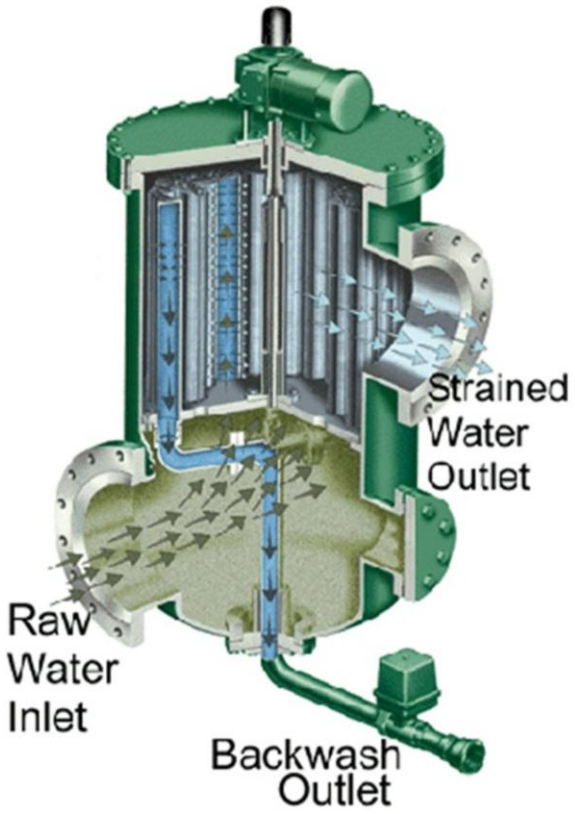

Figure 3: Section View of Typical Automatic Backwash strainer [SERFILCO]

Automated backwash strainers include instrumentation and controls to initiate strainer cleaning based on a time cycle or a pre-established strainer pressure differential.

Fire protection systems are equipped with diesel driven booster pumps which replaced the traditional elevated fire water storage tanks. Depending on the individual hydro plant economics, booster pumps may be able to provide increased volume and pressure in fire fighting situations than elevated water storage tanks. Fire protection systems are now automated with designs mandated by fire codes that were nonexistent in the early twenty century.

3.0 Operation & Maintenance Practices

3.1 Condition Assessment

The supply intake for the raw water system can be assessed at two locations depending on the plant layout. If the penstock is tapped for the raw water supply, then the trash rack condition assessment becomes critical for the same reasons that the turbines must be supplied debris free water. If the raw water is drawn from the tailwater, then the intake structures of raw water supply become important. In both cases see the condition assessment best practices in the Best Practice Catalog *Trash Racks and Intakes*. Unusual biological fouling by plants, fauna, fish and flood debris is a serious issue and must be evaluated for specific sites since it can vary significantly from plant to plant.

Raw water piping is difficult to evaluate for wall thickness or pinhole leaks. "D" meter readings of wall thickness are considered unreliable due to fouling on the inside of the pipe that may be ½"-¾" on a 6"-8" diameter pipe. Pinhole leaks may ultimately develop along the length of the piping system so replacement is typically justified.

The best practice for assessing the internal condition of the larger sized raw water pipe line is a camera mounted Remote Operated Vehicle (ROV), Figure 4.

Manual valves can be operated to determine proper operation. Condition assessment of disc, seats, and other internal components requires the removal of the pipe connections. A system that uses strategically located isolation valves enables this removal. Therefore, it is best practice to install isolation valves at selected location throughout the raw water system so that key equipment can be isolated and removed for internal inspection and/or repaired as required. The additional valve has little or no impact on the efficiency of the raw water system except for the head losses across the valve.

Figure 4: Remote Operated Vehicle (ROV) for Pipeline Inspection of Raw Water System [Substructure, Inc.]

The raw water system requires instrumentation to monitor and provide information to help control system equipment such as pumps and strainers. Instruments should be checked and re-checked for accuracy especially air cooler thermocouples, stator core Resistance Temperature Detectors (RTDs), flow meters, shunt voltage readings, proportioning valves controller, and isolation valve operators. Operability of the proportioning valves can be readily determined as to whether the valves are adjusting water flow for variations in air temperature. The correct function must be determined by the supplier's Original Equipment Manufacturers (OEMs) engineering documents. Some temperatures can be checked with hand held thermocouples, heat guns, and thermal imaging equipment depending on accessibility. Differential pressure gauges should be checked to ensure operability and accuracy. A common problem with differential pressure gauges is fouled or blocked pressure tubing.

Materials for generator cooling system piping may be cast iron, carbon steel, or stainless steel. The hydraulic performance for each type is detailed in numerous piping industry handbooks; Cameron Hydraulic Data is highly regarded [5]. As a best practice, the most common material would be ASME B36.10 Welded and Seamless Wrought Steel Pipe [6] constructed to ASME B31.3 Process Piping [7] standard.

The strainer unit will give the operator a good indication of the quality of the raw water supply. The best practice for evaluating the raw water strainer condition is based on two indicators: 1) pressure differential trend data across the unit and 2) the strainers performance after a back flush to operate at rated pressure drop or lower.

3.2 Operations

When it comes to the operation of a raw water system, how the pumps are efficiently used is critical to the cooling process. It is a best practice to operate centrifugal pumps within the Equipment Reliability Operating Envelope (EROE) to achieve maximum Mean Time between Failures (MTBF). The EROE, also called the heart of the curve (Figure 5), assures maximum centrifugal pump MTBF by avoiding all operating areas of hydraulic disturbances. An established best practice for the EROE range should be (+) 10% to (-) 50% in flow from the pump best efficiency point.

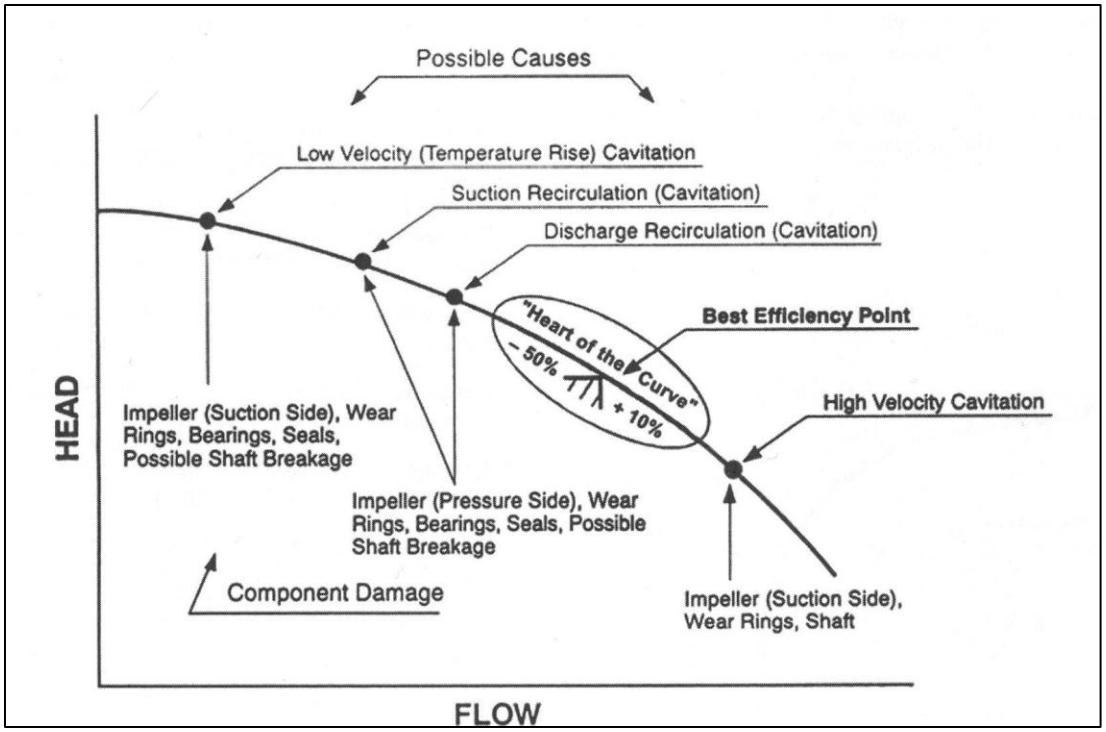

Figure 6: Centrifugal Raw Water Pump - component damage as function of operating point

Many new raw water pumps are selected with impeller diameters that are incorrectly sized for field operation parameters. The hydraulic calculations used to determine the pump head required for centrifugal pumps will only approximate the field conditions and can be conservative which will result in different field head required than noted on the pump data sheet. This can result in driver overload/underload and possible cavitation. Failure to establish EROE limits will lead to low MTBF of centrifugal pumps. Approximately 80% of centrifugal pump reliability reductions (causes of low MTBF) are due to process changes which cause the pump to operate in either a high flow or low flow range. This exposes the pump to hydraulic disturbances resulting in low MTBF. Establishing operator EROE targets for all critical site pumps and all “bad actor” pumps (pumps with one or more components failures per year) will ensure optimum centrifugal pump safety and MTBFs.

It is a best practice to ensure that every raw water centrifugal pump operates inside the EROE and change impeller diameter if required. Lower pump head required can force centrifugal pumps to operate at greater flow than the design point. Most centrifugal pump drivers are sized for +10% power and can be overloaded if the pump flow is greater than the design flow. The most cost effective solution to prevent driver overload is to reduce (cut or trim) the pump impeller diameter to arrive at the desired pump flow under the required conditions of actual field process head.

The safety and reliability of all centrifugal pumps is optimized if pumps are operated within the EROE. It is best practice to have raw water centrifugal pump curves available in the control

room, and operators need to be trained for using pump test curves to optimize centrifugal pump safety and MTBF. Centrifugal pumps produce flow inversely proportional to the required process head. This flow range is obtained by having operators aware of the centrifugal pump characteristics, providing process targets, and having the pump test curves available for each pump for operator use and understanding. Unnecessary centrifugal pump maintenance and pump failures result from operators not checking the pump test curves, not confirming that the pump operates within its EROE, and not understanding the test curves significance.

It is an instrumentation best practice to monitor (in the control room) the raw water pump flow range by inputting the pump shop test curve and collecting transmitter signals (inlet pressure, discharge pressure and flow) into spreadsheets to calculate the pump head and flow. Even if flow meters are not installed for each pump, EROE targets should be established by other methods (i.e., control valve position, motor amps, pump inlet, and discharge piping differential temperature). Critical centrifugal and 'bad actor pumps' require constant surveillance by operators to ensure optimum safety and reliability.

It is a best practice to adjust head as required. Head required in raw water pumping system can be changed by adjusting the discharge system resistance using pressure control, flow control, or level control. Each of these methods results in closing a throttle valve in the discharge piping which increases the head (energy) required and reduces the flow rate. This action requires more energy (head) to overcome the increased system resistance.

Using colored labels or paint to define each individual line of the system (supply lines, return lines, bypass lines) involves personnel and promotes ownership thus increasing system safety and reliability. It is a best practice to label raw water system piping to ASME A13.1 [8] with correct colored labels. This will help personnel understand the system operation.

Color coded and identified piping greatly increases site personnel awareness of raw water system operations. See Figure 6 for an example of piping labels. Many critical machine unit shutdowns are the result of not monitoring the local instrument and components in the system. Failure to properly label piping, instruments, and components leads to neglect and corresponding low system reliability.

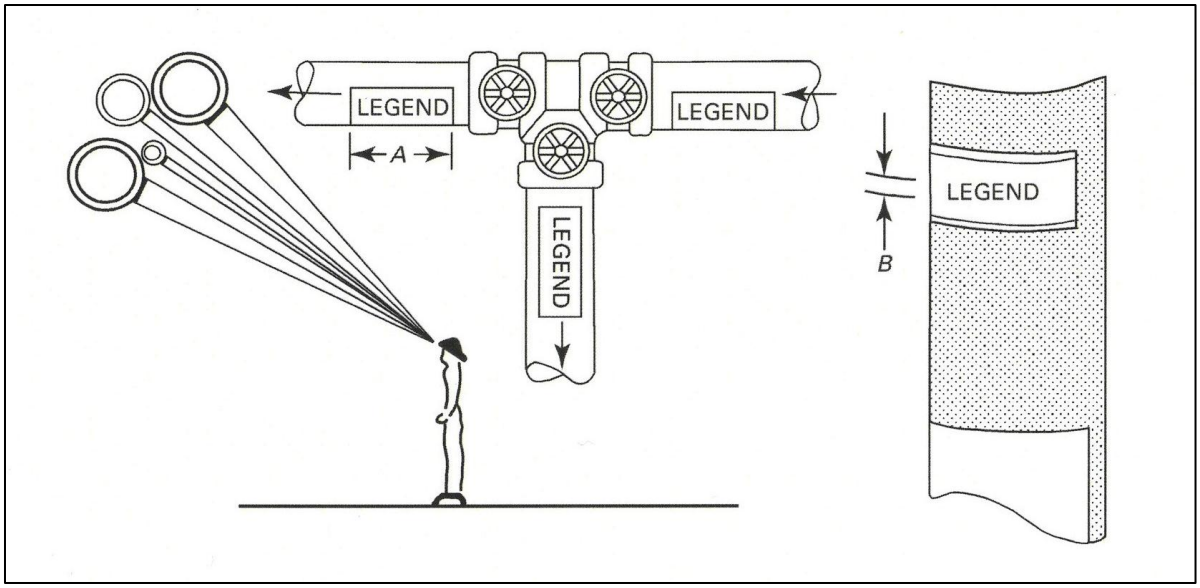

Figure 6: Piping Labeling from ASME 13.1 [8]

Proportioning valves control the raw water flow to the generator air coolers for maintaining proper generator air temperature. The benefit of the proportioning valve is when the generator is operating in load following mode with significant changes in MVA output. The valve controller would be set to the desired air temperature. Generator air cooler flow balancing is a common operational procedure and should be readily accomplished by plant staff. Air cooler discharge temperature should be checked from each cooler to ensure uniform cooling.

3.3 Maintenance

The raw cooling water to the strainer performance condition is typically judged by the differential pressure across the strainer (Figure 7).

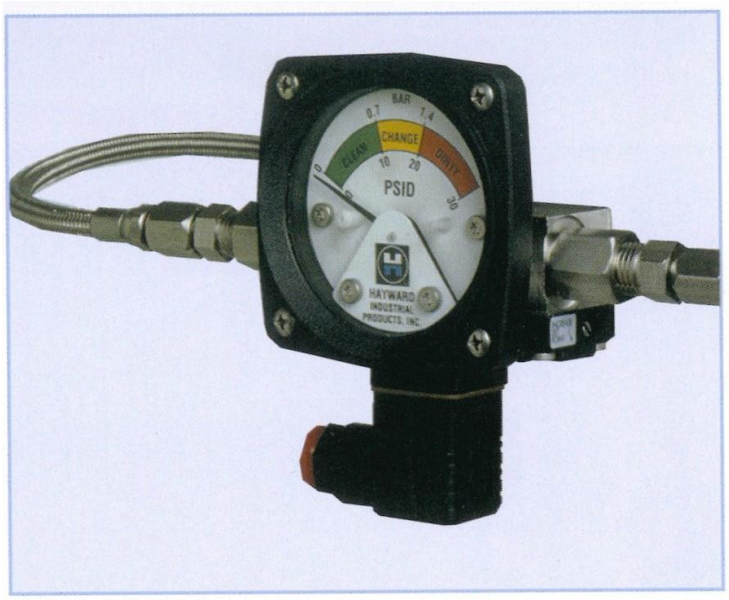

Figure 7: Typical differential pressure gauge with feedback switch [EATON]

However, high differential is due to fouling of the strainer which can be corrected by installing a back flush feature. Most strainers are designed with a 1/16” to 1/32” screen size to allow small particles to pass for scouring action in the pipes and heat exchanger tubes. If the strainer elements fail, the strainer is essentially a piece of pipe which does not remove the large, harmful debris. Unusual biological fouling, including small fish (shad) and flood debris, can present a problem but will normally be corrected with a well designed back flush system. The strainer should require minimal maintenance except to replace the internal elements that may degrade with time.

The generator raw water pipe and generator air cooler tubes foul in any system. The cleaning of the raw water pipe is probably of minimum value unless the fouling actually reduces raw water flow to below design value. The generator air cooler tubes are more critical and require periodic cleaning to maintain acceptable performance.

With modern air cooler design, the efficiency of the air cooler will be very similar to a counter flow heat exchanger. The old generator air coolers were similar to a cross flow heat exchanger with a reduced thermal efficiency. The best measure is the difference between the raw water cold inlet temperature and the cold air discharge temperature. The raw water temperature is the theoretical temperature as to how much the cold air temperature can be lowered.

Typical efficient coolers will have a cold air discharge temperature of approximately 5°C above the raw water inlet temperature. In the case of badly fouled tubes and degraded fins, the air temperature approach to the raw water temperature may be 15°C to 20°C. In the case of 30°C water inlet temperature, the maximum design air temperature of 40°C would be exceeded and the cold air temperature would be 45°C to 50°C.

4.0 Metrics, Monitoring and Analysis

4.1 Measures of Performance, Condition, and Reliability

The Raw Water System includes cooling water pumps (for plants/units that are so equipped), piping, valves, strainers, instrumentation, and controls. As an auxiliary system, the condition of the Raw Cooling Water system components can affect the performance and reliability of the generating plant/unit(s).

Plant/unit performance measures include Equivalent Availability Factor (EAF), Equivalent Forced Outage Factor (EFOR), Maintenance Outage Rate (MOR), and Planned Outage rate (POR). These indicators are used universally by the power industry. Many utilities supply data to the Generating Availability Data System (GADS) maintained by the NERC. This database of operating information is used for improving the performance of electric generating equipment. It can be used to support equipment reliability and availability analysis and decision-making by GADS data users.

Periodic fielding testing/evaluation of Raw Cooling Water System components that are noted as contributors to decreases in plant/unit availability should be conducted. Periodic testing includes cooling water pump flow tests, pipe/cooler fouling investigations, internal valve and/or strainer inspections, or other tests identified.

4.2 Analysis of Data

The reliability of a generating unit, including its auxiliary support systems, can be monitored through reliability indexes or performance indicators as derived according to NERC's Appendix F, Performance Indexes and Equations [9].

4.3 Integrated Improvements

As raw water system components are identified as contributors to decreases in plant performance and availability or increases in maintenance costs, field testing of the specifically identified raw water system component(s) is performed. The field test results are trended and analyzed. Using the collected/analyzed data, projects to eliminate or mitigate any identified degradation or high maintenance component issues are developed, ranked, and justified in the Capital and Maintenance funding programs. Capital and Maintenance projects that are approved are implemented to return the component to an acceptable condition and performance level. Post implementation testing of components that are replaced/modified or otherwise repaired is conducted to verify that issues that resulted in decreased unit/plant performance and/or reliability have been addressed.

5.0 Information Sources:

Baseline Knowledge:

1. EPRI, *TR-112350-V4 Hydro Life Extension Modernization Guides: Volume 4-5 Auxiliary Mechanical and Electrical Systems*– Palo Alto, CA – 2001
2. ASME, *The Guide to Hydropower Mechanical Design*, HCI Publications Inc., 1996
3. TVA, *Technical report No.24 Mechanical Design of Hydro Plants*, US Government Printing Office – Washington - 1960

State of the Art:

4. Forsthoffer, W., E., *Best Practice Handbook for Rotating Machinery* – 2011
5. Heald, C., C., *Cameron Hydraulic Data* – Nineteenth Edition -2002

Standards:

6. *ASME A36.10, Welded and Seamless Wrought Steel Pipe - 2004*
7. *ASME B31.3, Process Piping ASME Code for Pressure Piping – 2008*
8. *ASME A13.1, Scheme for Identification of Piping Systems -2007*
9. *NERC, Appendix F, Performance Indexes and Equations - January, 2011*

It should be noted by the user that this document is intended only as a guide. Statements are of a general nature and therefore do not take into account special situations that can differ significantly from those discussed in this document.

Best Practice Catalog

Compressed Air System

Revision 2.0, 8/6/2012

1.0 Scope and Purpose

This document addresses the technology, condition assessment, operations, and maintenance best practices for compressed air systems with the objective to maximize performance and reliability of generating units. Compressed air systems are used in powerhouses for operation and to facilitate maintenance and repair. Station service air, brake air, and governor air comprise the three sub-systems that are required in all powerhouses. Some powerhouses will also require a draft tube water depression system. [1]

Generally, each of the sub-systems is dedicated except for the brake air system, which is usually supplied by station service air. Figure 1 shows typical process and instrumentation diagrams of compressed air systems at hydropower facilities.

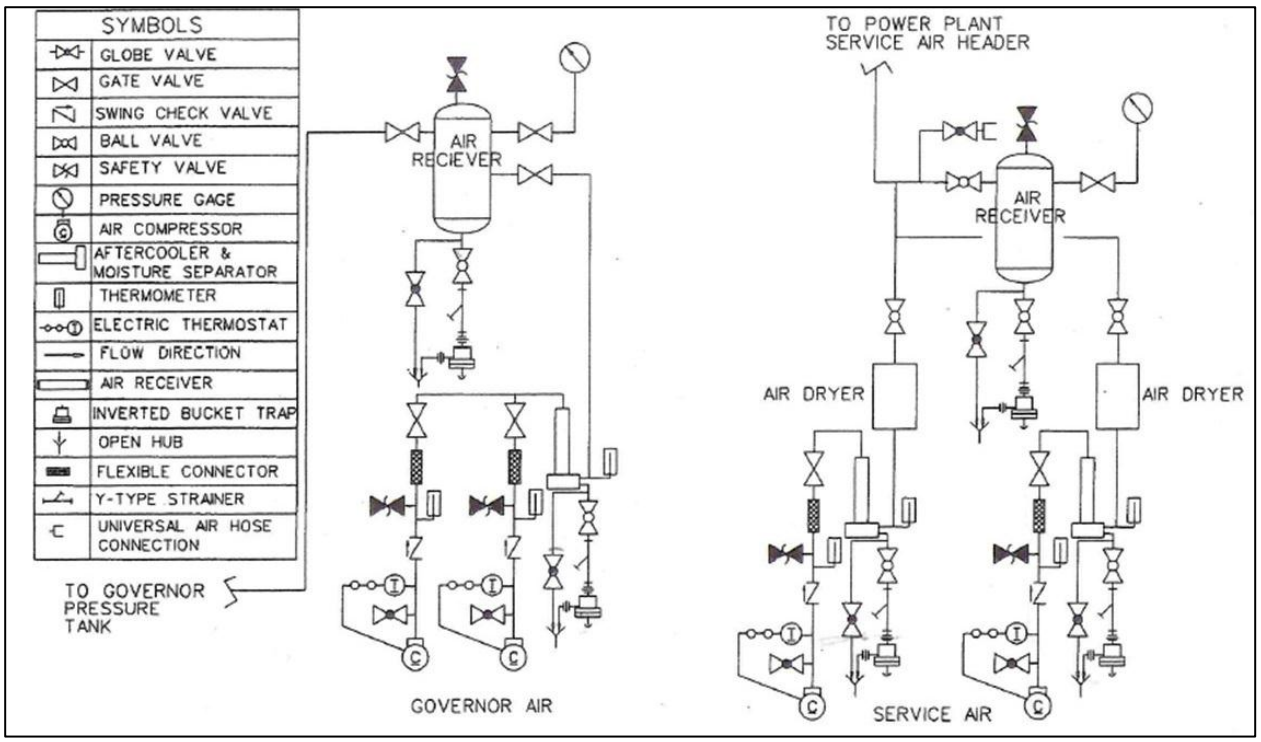

Figure 1: Typical Service and Governor Compressed Air Systems P&ID [1]

1.1 Hydropower Taxonomy Position

Hydropower Facility → Powerhouse → Balance of Plant/Auxiliary Systems → Compressed Air System

1.1.1 Compressed Air System Components

Compressed air is widely regarded as “the fourth utility” after electricity, gas, and water; and is commonly used in hydroelectric generating plants. The main reliability

components of compressed air systems include compressors, after-coolers, air dryer/moisture separators, air receiver/tanks, piping (distribution), and control/instrumentation (Figure 2).

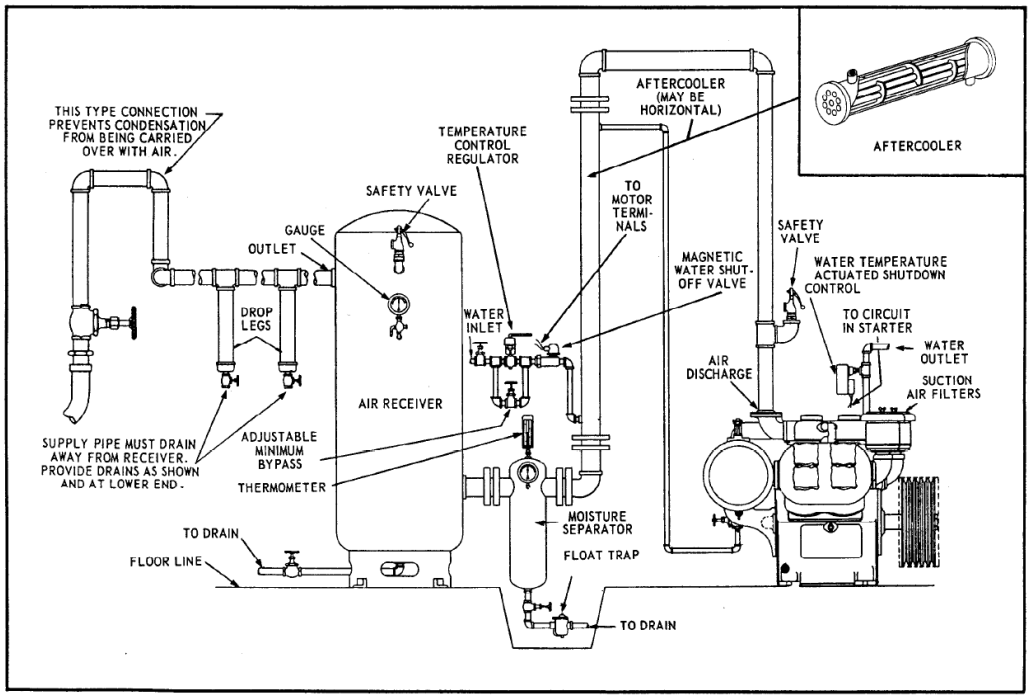

Figure 2: Main Components of a Compressed Air System [2]

<u>Compressors:</u> Ambient air is drawn into compressor intake pipes/ducts and is usually filtered prior to entering the air compressor. Once compressed, the application will determine the components installed in the discharge and distribution network for each system.

Industrial air compressors can be divided into two main groups with positive displacement and dynamic characteristics (Figure 3). Positive displacement compressors draw air into a fixed volume and gradually reduce the volume, increasing the pressure of the air. Once the design pressure is reached, the air is released to the system. Positive displacement compressors include the reciprocating, rotary screw, rotary sliding vane, liquid ring, and rotary blowers.

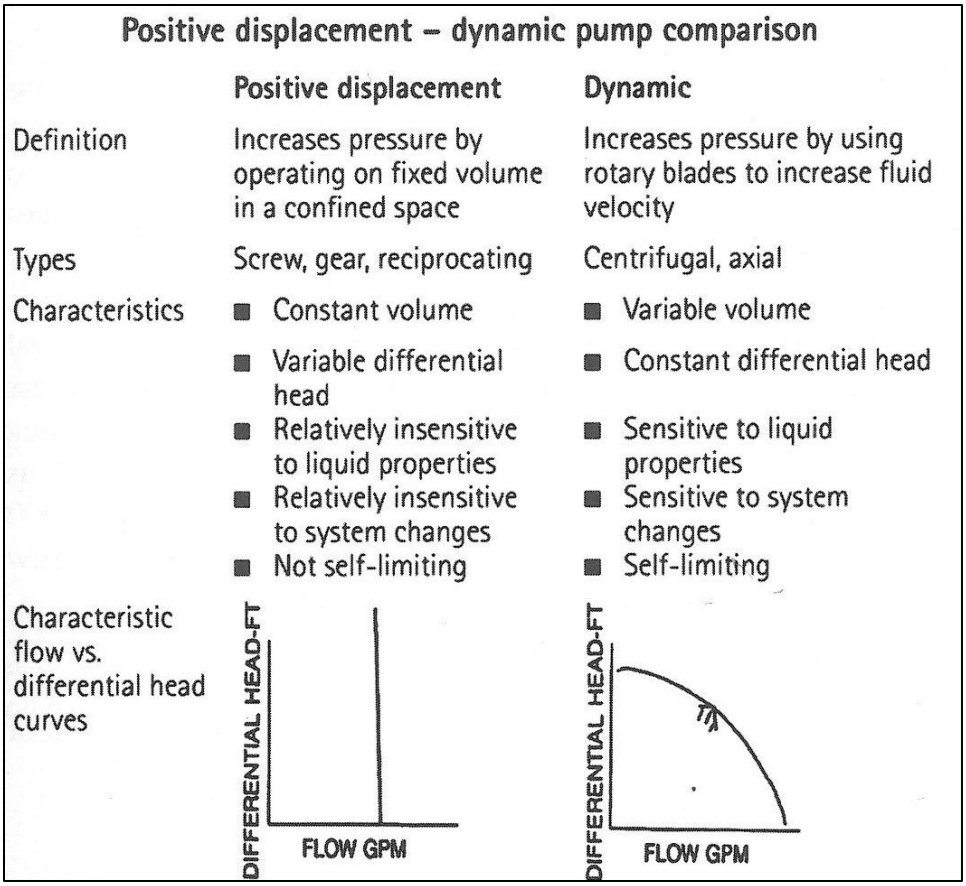

Positive displacement – dynamic pump comparison

	Positive displacement	Dynamic
Definition	Increases pressure by operating on fixed volume in a confined space	Increases pressure by using rotary blades to increase fluid velocity
Types	Screw, gear, reciprocating	Centrifugal, axial
Characteristics	■ Constant volume ■ Variable differential head ■ Relatively insensitive to liquid properties ■ Relatively insensitive to system changes ■ Not self-limiting	■ Variable volume ■ Constant differential head ■ Sensitive to liquid properties ■ Sensitive to system changes ■ Self-limiting
Characteristic flow vs. differential head curves	DIFFERENTIAL HEAD-FT FLOW GPM	DIFFERENTIAL HEAD-FT FLOW GPM

Figure 3: Positive Displacement and Dynamic Characteristics [8]

Dynamic compressors draw air between blades rotating on a rapidly moving impeller accelerating the air to a high velocity. The air is then discharged through a diffuser where the kinetic energy is transformed into static pressure [3]. Dynamic compressors include centrifugal and axial types.

Positive displacement and dynamic compressors are illustrated in Figure 4. Hydroelectric plants generally employ positive displacement compressors, specifically reciprocating and rotary screw, to satisfy their compressed air needs. For this reason this compressed air best practice will focus on positive displacement compressors.

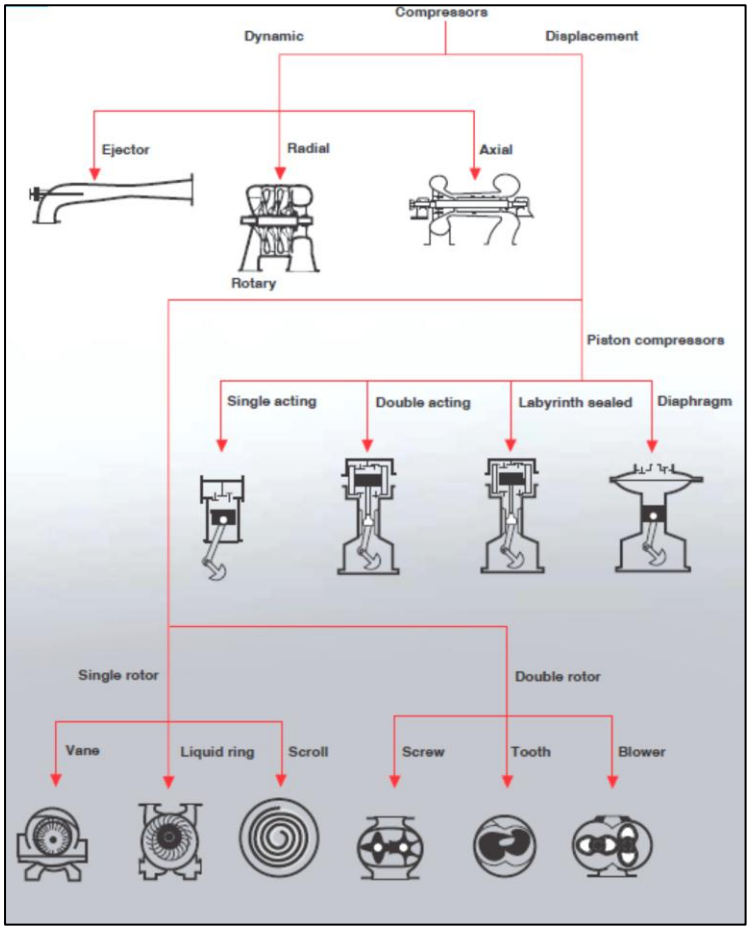

Figure 4: Air Compressor Types [6]

Reciprocating: A reciprocating air compressor functions much like a standard automobile engine (Figure 5). A piston is driven inside a cylinder by a crankshaft. As the piston is drawn towards the crankshaft, an intake valve opens in the cylinder head. The cylinder fills with air until the piston reaches the bottom of the cylinder. As the piston begins to travel away from the crankshaft, the intake valve closes and the air inside the cylinder is compressed. When the compressed air reaches a high enough pressure, an exhaust valve opens in the cylinder head and pushes compressed air into the compressed air system.

A single-acting reciprocating air compressor uses valves on only one end of the cylinder. To increase efficiency, two cylinders may be operated with the same piston by placing an intake and exhaust valve at either end of the cylinder. With this arrangement, the piston compresses air in each direction. This is called a double-acting reciprocating air compressor. Single-acting reciprocating compressors are cheap and weigh relatively little. They are generally used in applications with smaller power requirements and are usually air-cooled. Due to their smaller size, they do not require substantial base pad sizes. The downside of these compressors is their lower efficiency.

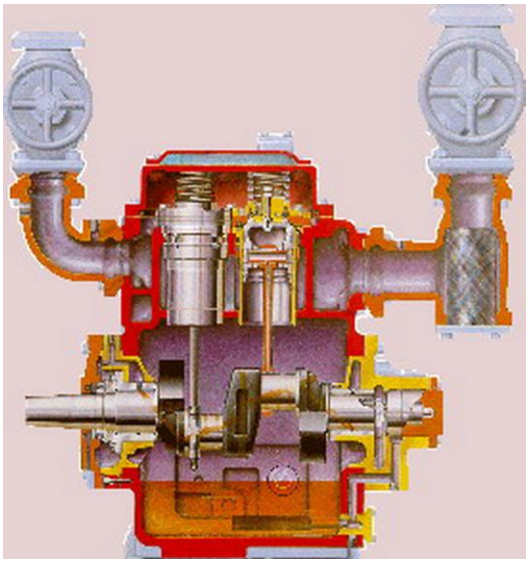

Figure 5: Reciprocating Air Compressor

Double-acting reciprocating compressors are the most efficient type of compressor. They are usually used in applications with higher power requirements and are usually water-cooled. These have become the most common design of the two types. However, these compressors are quite heavy and require substantial pads. They are also more expensive to purchase than single-acting reciprocating compressors and cost more to install and maintain [3].

Rotary Screw: Rotary screw air compressors come in two drive configurations for the same basic design. The basic design is two rotors (one male and one female) meshed together and turning in opposite directions (Figure 6). One end of the rotors is exposed to the intake air and the other is exposed to the compressed air system. The compression begins with air filling the channels of the female rotor. The air fills the channels all the way around the rotor until the male rotor seals the channel. As the rotors turn, the air is driven into the compressed air system by action of the male and female rotors pushing the air along the channel. Another form of drive is to have one rotor turn the other.
Rotary positive displacement compressors are smaller and quieter than reciprocating compressors. They also have smaller footprints than equally sized reciprocating models and may be installed directly on the floor. They do not produce pulsations typically found in reciprocating compressors due to continuous flow. Two-stage rotary compressors are more efficient than single-stage reciprocating, but not as efficient as two-stage, double-acting reciprocating units. Another drawback of rotary units is that their efficiency significantly decreases at partial load. Lubricant-free rotary compressors are less efficient than compressors that use lubricant, but have the added benefit of no oil entrainment in the compressed air [3].

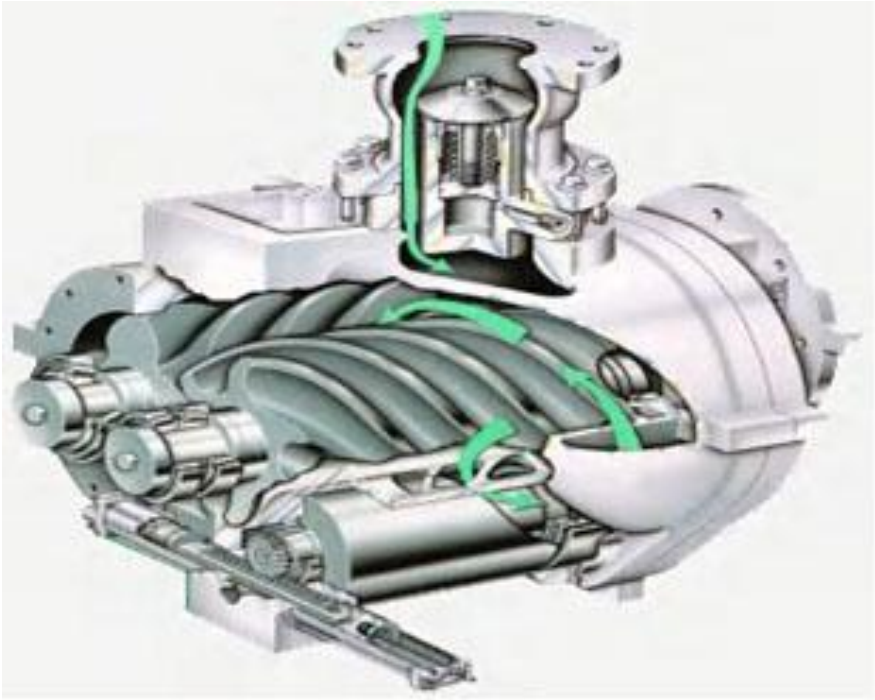

Figure 6: Rotary Screw Compressor

Air Receivers/Tanks: The function of an air receiver is to provide a reservoir of clean dry air to meet fluctuating system demands. The benefit of this item is that, when properly sized and installed, a receiver can minimize air line pressure fluctuations. This also prevents short term capacity requirements from overloading clean-up equipment. Each air receiver should conform to design, construction and testing requirements of the ASME Boiler and Pressure Vessel Code Section VIII Div. 1 and have a “U” or “UM” stamp [10] (Figure 7).

Figure 7: Vertical and Horizontal Air Receivers

After-cooler: The compressed air discharged from an air compressor is hot. Compressed air at these temperatures contains large quantities of water in vapor form. As the compressed air cools this water vapor condenses into a liquid form. As an example if an aftercooler is not used, a 200 scfm compressor operating at 100 psig introduces 45 gallons of water into the compressed air system each day.

Type of Compressor	Average Outlet Air Temperature (°F)
Oil Flooded Rotary	200
Oil Free Rotary	350
2-St. Reciprocating	300

Additionally, by reducing the air temperature, condensate forms. Most air aftercoolers are sized to cool the air to within 5°F to 20°F of ambient air temperature. As the compressed air cools, up to 75% of the water vapor present condenses to a liquid and can be removed from the system. [7]

Air Dryer: A moisture separator/air-dryer installed at the discharge of the after-cooler removes most of the liquid moisture and solids from the compressed air. Utilizing centrifugal force, moisture and solids collect at the bottom of the moisture separator. An automatic drain should be used to remove the moisture and solids. Aftercoolers are either

water or air-cooled. Depending upon the quality of air required, driers may be placed on either the supply or discharge side of the air receiver tank. For example, brake air tapped

off the discharge of the station service air receiver may have a smaller individual air dryer.

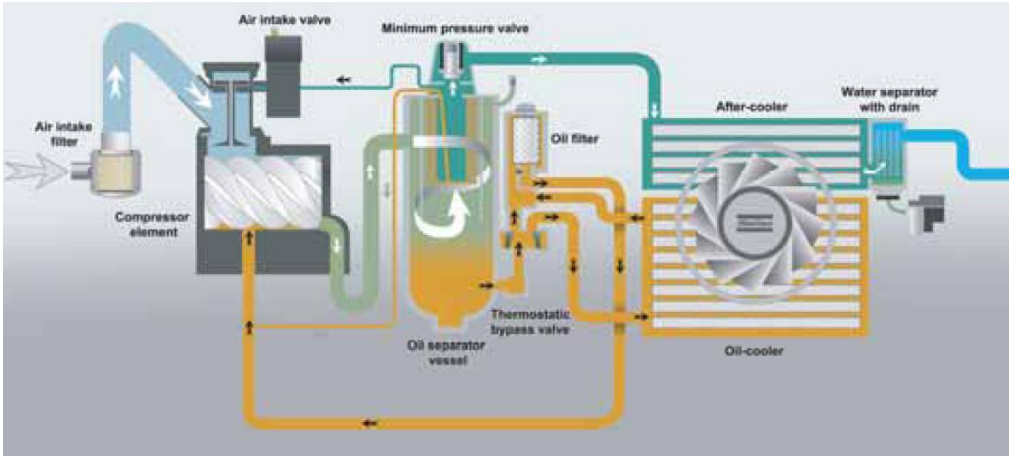

Figure 8: Oil Lubricated Screw Compressor and After-cooler Arrangement [6]

Piping: The function of the piping is to direct ambient air from the source to the compressor and from the compressor through installed system components to the end users in the distribution system. The piping distribution system is the link between supply, storage, and demand. Ideally, the distribution system will be sized to allow the required air to flow with minimum pressure drop. It will supply an adequate amount of compressed air at the required pressure to all of the locations where compressed air is needed.

Control/Instrumentation: Control systems for air compressors vary from the relatively simple to the extremely sophisticated. The simpler control systems, through the use of sensors, monitor the performance of the equipment and alert the operator through the use of lights and/or audible sounds when a set variable is beyond the normal operating range. Most systems automatically initiate a shutdown procedure under certain conditions to prevent equipment damage. With increasing use of remote unattended compressor installations, the demand for the highest degree of protection and reliability has brought much advancement and lessened the need for operator involvement.

Many control systems provide a completely automatic sequence for starting, operating, and shutdown of compressors. The advanced control systems are able to optimize equipment efficiency by controlling one or more variables (flow, pressure, and temperature) to obtain a specified level of performance. Pressure indicators, flow meters, temperature indicators, and differential pressure indicators are examples of key instruments.

1.2 Summary of Best Practices

1.2.1 Performance/Efficiency & Capability-Oriented Best Practices

- There are no best practices directly associated with the efficiency and capacity of compressed air systems.

1.2.2 Reliability/Operations & Maintenance-Oriented Best Practices

- Measure for performance and gather baseline data by using instruments and methods set out in ISO 1217 International Standard [9].
- Compare actual air compressor run time to the expected run time as an indicator of compressor performance and system integrity.
- Restrict reciprocating compressor pulsation limits to +/- 2% of line pressure for safe and reliable operation.
- Do not use medium to high speed reciprocating compressors (i.e., greater than 400 rpm) for hydro plant duty.
- Size generator brake air system capacity to stop all turbine-generator units simultaneously without adding air to the system and without reducing system pressure below 75 psi.
- Supply governor air system by dedicated air compressors. The operating pressure should be approximately 10% above the rated governor system pressure. Compressor capacity should be sufficient to completely pressurize the governor tank with the proper oil level in 4 to 6 hours.
- Size air receiver capacity for governor air system to provide 5 minute compressor running time to raise receiver pressure from atmospheric to system pressure.
- Draft tube water depression system capacity should be sized sufficient to displace the draft tube water to clear the turbine runner in approximately 10 seconds and to 3 feet below the runner in approximately 60 seconds.
- Ensure total pressure drop does not exceed 15 psi across all compressed air system components including piping.
- Develop a formal program to monitor and repair leaks.
- Use a header pipe size at least one size larger than calculated. This will provide additional air storage capacity and allow for future expansion.
- Schedule compressors for weekly running inspection and a yearly major inspection.
- Establish a lubrication schedule for air compressors and establish specific responsibilities for carrying out periodic lubrication.

- Slope all piping in a loop system with accessible drain points. Air outlets should be taken from the top of the main line and install drip legs or drain valves at all low points.

1.3 Best Practice Cross-references

- I&C - Automation
- Mechanical – Lubrication Systems
- Mechanical – Governor
- Electrical – Generator

2.0 Technology Design Summary

2.1 Material and Design Technology Evolution

The idea of using compressed air to transmit energy became popular in the early 1800's as metal manufacturing plants grew and emphasized the limitation of steam power. A plant powered by water and compressed air was built in Wales in the 1820s, and despite a few air leaks, new uses for compressed air began to emerge.

The novelty of many compressed air services started a backlash against electricity by many engineers who saw compressed air as the energy distribution system of the future. However, electricity advocates held strong to their belief that pneumatic plants were inefficient and would eventually be trumped by electricity.

As both energy systems developed, compressed air became an important complement to electricity. Pneumatic tools are lightweight and safe, and compressed air is used for monitoring, control, and regulation frequently in combination with hydraulics and electricity. The electricity and pneumatic systems working together have given the world new ways to use power [7].

2.2 State of the Art Technology

There are two main types of modern compressed air systems: oil-free and lubricated. Depending on the air purification and system requirements, each design is suitable for plant applications. Air purification requirements include general purity, instrument quality, breathing air, and clean dry air. Hydropower facilities generally utilize lubricated compressors producing cool compressed air with minimal treatment. It is also current practice to use instrument quality air for brakes to reduce corrosion and maintenance on pistons for modernized units.

The lubricant is used to alleviate friction between moving parts. In rotary screw compressors, the lubricant also seals clearances and removes heat of compression. The viscosity of the lubricant used depends largely on the operating ambient temperature range. It must offer adequate lubrication for bearings and rotors at operating temperature. In addition, it must have a pour point low enough to provide fluidity at low starting temperature.

A modern lubricated rotary screw compressor and high-efficiency purification system can produce compressed air with very high purity. These systems are very similar to the oil-free system consisting of a wet receiver, an air dryer, and a coalescing filter. These

are integrated inside of a sound reduction enclosure (Figure 9). This type of system should be considered when air compressors are replaced/upgraded or when a major modernization to a plant is proposed. A variable-speed drive (VSD) air compressor is also a state of the art technology. This type of compressor uses a variable-frequency drive to control the speed of the unit which in turn saves energy compared to a fixed speed equivalent.

Figure 9: Lubricated Air Cooled Compressor

Downstream from the compressor, an air receiver stabilizes system pressure, serves as a demand reservoir, and holds some moisture. Downstream from the receiver, an air dryer, which will provide the correct pressure dew point, traps the remaining moisture. If either fails, there is a coalescing filter consecutive to the dryer to provide protection. A dry receiver can also be installed after the coalescing filter to stabilize pressure and serve as a reservoir for times of high demand.

Moisture in the form of liquid and vapor is in compressed air as it leaves the system. The system can lose productivity and require significant maintenance if the moisture and other contaminants are not removed properly. Purification devices have been developed to help remove some of the contaminants from the system. As pneumatic applications and compressed air systems become more sophisticated, the proper selection of these devices is crucial. The most critical devices for condensate control are the coalescing filter, drain valve, air dryer, and after filter.

3.0 Operation and Maintenance Practices

3.1 Condition Assessment

Determining the condition of a compressed air system is an essential step in analyzing the risk of failure. There are a number of best practices for assessing the condition of the compressed air system.

Compressor performance testing is intended to assess how well the compressor is working. Measurements usually require special test equipment that will vary depending on the type of equipment. Compressor air flow measurements indicate the functionality of the compressor while it is running and exclude the effects from other system components that will bias the run time data. Compressor air temperature tests measure the effectiveness of the after coolers and/or excessive output temperatures while running. Compressor motor current and megger-resistance to ground tests provide information about the motor condition and input shaft power requirements. ISO 1217 International Standard [9] sets out the instruments and methods for the measurement of performance and gathering of baseline data.

Compressed air system problems can often be detected during the course of physical inspections. Problems that may be observed include substantial air, oil, and water leaks, excessive vibrations, abnormal noise while operating, corrosion, warping, belt tension, or failures on control panels. The known physical condition of the compressed air system is a major indicator of overall system reliability.

A comparison of actual air compressor run time to the expected run time is an indicator of compressor performance and system integrity. An increase in run time indicates a reduction in performance due to worn compressor components (i.e., cylinder wear, ring wear, check valve leakage, or similar wear related effects) [4].

3.2 Operations

Service Air System: The service air system is usually a nominal 100 psi system providing air for maintenance and repair, control air, hydropneumatic tank air, charging air for the brake air system, air via a pressure reducing regulator for wicket gate shear pin alarm systems, and in some cases air for ice control bubblers. This system is supplied by dedicated air compressors. Typical plant service air requirements vary from 75 cfm to 125 cfm with major maintenance requirements supplied by portable sources.

When using a reciprocating compressor, the action of the piston is non-continuous and pressure pulsations will be generated. Depending upon the piping arrangement, these pulsations can be magnified to destructive levels. It is a best practice to restrict reciprocating compressor pulsation limits to +/- 2% of line pressure for safe reliable operation. This can be achieved with the use of pulsation dampers. Installation of orifices or pipe modification may be necessary.

Station service air is typically passed through an aftercooler. The aftercooler is equipped with a moisture separator following compression to lower the air discharge temperature to essentially ambient temperature and remove any entrained moisture that would ultimately condense in the distribution piping system. Aftercoolers are incorporated into virtually all modern compressor installations as an integral part of the compressor.

It is a best practice not to use medium to high speed reciprocating compressors (i.e., greater than 400 rpm) for plant duty. Maintenance costs, excessive pulsation, and associated safety and mechanical issues have resulted in an aversion to the use of lubricated compressors operating above 400 rpm. Typical component mean time between failures (MTBF) for high speed (greater than 100 rpm) for packing, piston ring, and valves is less than 12 months and is less than 6 months for shutdown to repair pulsation related issues [8].

Compressors should be heavy duty, water-cooled, flood lubricated, and cooled rotary screw type rated for continuous duty. Normally, aside from major maintenance, service air should be supplied by two identical compressors each of which is capable of supplying approximately 75% of the requirement [5].

Brake Air System: The brake air system is comprised of one or more semi-independent storage and distribution installations for providing a reliable supply to actuate the generator brake systems. Compressed air is supplied from the service air system, stored in air receivers, and distributed through the governor actuator cabinets to the generator brake systems.

Air is required in the system to stop all turbine-generator units simultaneously without adding air to the system and without reducing system pressure below 75 psi. Each unit may be assumed to require 1.5 cubic ft at 75 psi. Storage capacity calculations should consider the number of brake applications per stop, the maximum brake cylinder displacement with worn linings, and the volume of all piping downstream from the control valve. Each subsystem should be designed to serve two units and include a receiver, piping from the service air system to the receiver, and piping from the receiver to the governor cabinet to the respective generator brake system. Each receiver should be designed, manufactured, and tested in accordance with the ASME Boiler and Pressure Vessel Code VIII Div. 1 [10] and be isolated from the service air system in case of a loss of service air pressure [5].

Governor Air System: The governor air system provides the air cushion in the governor pressure tanks. When the governor system is to be placed in operation, the pressure tank is filled approximately one-fourth full with oil, and the tank is pressurized to governor operating pressure from the governor air system. The governor air system is supplied by dedicated air compressors. Pressures for various sizes of units currently vary from 300

psi to 1,700 psi. The operating pressure should be approximately 10% above the rated governor system pressure. Compressor capacity should be sufficient to completely pressurize the governor tank with the proper oil level in 4 to 6 hours. To reduce this time range, a best practice is to provide a tie to the station air system (large volume) to quickly add compressed air and reduce the time required for the smaller governor air compressor.

The total governor air supply should be provided by two identical compressors, each rated at not less than 50% of the capacity. The compressors should be heavy duty, reciprocating, water or air-cooled, and rated for continuous duty. Package units are preferred. Each package should include compressor, motor, base, aftercooler, controls, and other accessories. Each compressor should be supplied with manual start-stop and automatic load-unload control.

Since manual-start and automatic-unloading control is used for governor air compressors, receiver capacity is required only to assure reasonable control action. A receiver capacity providing a 5 minute compressor running time to raise receiver pressure from atmospheric to system pressure is adequate. Air receivers should be designed, manufactured, and tested in accordance with the ASME Boiler and Pressure Vessel Code VIII Div 1 [10].

Draft Tube Water Depression System: A draft tube water depression system is required in plants with submerged turbine or pump-turbine runners where planned operations include the operation of one or more units at synchronous condenser mode, motor starting for pumping, or spinning reserve. The system function is to displace and maintain draft tube water to a level below the turbine runner permitting the runner to turn in air. The draft tube water depression air system is normally supplied by dedicated air compressors, although some plants supply station service air from the depression air system. System components, particularly receivers and piping, will generally be of large physical size. The minimum system operating pressure during initial depression should be approximately 15 psi higher than the pressure required to depress the draft tube water 3 feet below the runner. Maximum system pressure depends on required displacement volume and receiver capacity, but a nominal 100 psi system will usually be satisfactory.

The system capacity should be sufficient to displace the draft tube water to clear of the turbine runner in approximately 10 seconds and to 3 feet below the runner in approximately 60 seconds,

plus additional volume to cover air losses during initial depression. Air must also be available after initial depression to maintain the water level approximately 3 feet below the runner. This includes a control system with pressure switch solenoid valves for the described blow down procedure. An estimate of this air capacity requirement is dependent upon leakage of air through the shaft gland and water leakage through the wicket gates. A reasonable estimate of this requirement is 2 cfm per foot of unit diameter at the wicket gates. The capacity for initial draft tube water depression must be available in receivers due to the brief, high flow requirement. Receivers should be designed, manufactured, and tested in accordance with the ASME Boiler and Pressure Vessel Code VIII Div. 1 [10].

The total draft tube water depression air supply should be provided by two identical heavy duty, water cooled, reciprocating, or flood-lubricated and cooled rotary screw compressors suitable for continuous duty, each rated at no less than 50 to 60 percent of the required capacity [5].

Air System Control: Most compressors are controlled by line pressure. A drop in pressure normally signifies a demand increase. This is corrected by increased compressor output. A rise in pressure usually indicates a decrease in demand which causes a reduction in compressor output. To accommodate the fluctuating demand, a load/no load or constant speed control can be used to run the compressor at full load or idle. Either a single compressor or a multiple compressor installation, which is either centralized or decentralized, can provide the entire plant supply. There are three other types of compressor control systems:

Auto-dual control: Most traditional modulating controls throttle the capacity 30%-50% before fully unloading the compressor. This type of modulation is known as auto-dual control. It combines start/stop and constant speed control into a single control system. Auto-dual control automatically selects the most desirable control method and runs the compressor in constant speed control. When the compressor unloads, an unloaded run timer energizes which usually has a time range of 5 to 60 minutes. If the compressor does not reload, the timer will shut the compressor off. The compressor will restart and reload when the pressure switch senses low pressure.

Sequencing**:** Sequencing is also known as a central controller. This has the advantage of little cost per compressor and is usually available for systems with up to 10 compressors. A sequencer should have a single pressure transducer in the air header. Logic should maintain a target pressure within +/- 5 psi. The sequencer should automatically start and stop compressors, as well as load and unload them. The control should be set to rotate the order of loading and unloading to optimize compressor combinations for different demand conditions.

Lead/Lag: Lead/lag controls are typically found on reciprocating compressors. When there are two compressors in the system, one compressor can be set as the lead

compressor, and the other as the lag compressor. When the pressure drops to a certain point on the lead compressor, the lag compressor will then take over. These can also be switched so that the other compressor is the lead compressor. This periodic switching is to equalize wear.

Piping Distribution: The compressed air travels through a network of pipelines. The flow creates friction and results in pressure drop. The pressure drop should never exceed 1-2 psi per branch. The longer and smaller diameter the pipe is, the higher the friction loss. To reduce pressure drop effectively, a loop system with two-way flow can be used. Pressure drop caused by corrosion and the system features are important issues. These typically range from 5-25 psi and their control is essential for the efficiency of the system. The control air receiver located after the compressor should be sized for about 1 gallon capacity per CFM of compressor capacity. To ensure an effective demand side control management system, the storage air receiver should be sized for about 2-4 gallon capacity per CFM of compressor capacity. Total pressure drop should not exceed 15 psi across all compressed air system components including piping [7].

3.3 Maintenance

Whole System: Preventive maintenance is crucial. Leaks are one of the biggest maintenance issues and can be very expensive. For example, one ¼" diameter opening equals 100 CFM at 90 psig. This is equivalent to running a 25 horsepower compressor. However, developing a formal program to monitor and repair leaks can help control or prevent leakage. If a leak goes undetected, it can eventually cause the entire system to be shut down.

An air receiver near the compressor should be located to provide a steady source of control air, additional air cooling, and moisture separation. In the distribution system, there may be periodically large volume demands which will rapidly drain the air from surrounding areas and cause pressure levels to fall for surrounding users. However, strategically located receivers in the system can supply these abrupt demands and still provide a consistent air flow and pressure to the affected areas.

It should be selected that piping systems have low pressure drop and provide corrosion free operation. Consideration should be given to the use of 300 series stainless steel piping due to its strength, weight, and corrosion resistant characteristics. The main air header is sized for a maximum pressure drop of 1 to 2 psi (.07 to .14 bar). A good rule is to use a header pipe size at least one size larger than calculated. This will provide additional air storage capacity and allow for future expansion.

It is suggested that all piping in a loop system be sloped to accessible drain points. Air outlets should be taken from the top of the main line to keep possible moisture from entering the outlet. Drip legs or drain valves should be installed at all low points in the system where it is possible for moisture to accumulate [7].

All types of Compressor: A well-maintained compressor, in addition to having less downtime and repairs, will save on electrical power costs as well. The following is the best practice for inspection schedules of compressors:

> Daily Inspection: The operator shall inspect the compressor daily for the following conditions: (a) unusual noise or vibration, (b) abnormal suction or discharge pressure or temperature, (c) abnormal oil pressure when force-fed lubrication is provided, (d) abnormal bearing temperatures, (e) overheating of motor, and (f) oil leaks.
>
> Annual Inspection: Once a year or as required, depending on the severity of service, clean and inspect the compressor for the following conditions: (a) corrosion or erosion of parts, (b) proper clearances, (c) correct alignment, (d) worn or broken timing gears, (e) timing gear setting, (f) operation and setting of safety valves, and (g) wear of shafts at seals.

Establish a lubrication schedule for air compressors and specific responsibilities for carrying out periodic lubrication. Normal oil levels must be maintained at all times. Use only lubricants recommended by the manufacturer. Frequency of oil changes is dependent upon severity of service and atmospheric dust and dirt. The time for oil changes can best be determined by the physical condition of the oil. When changing oil, clean the inside of the crankcase by wiping with clean, lint-free rags. If this is not possible, use a good grade of flushing oil to remove any settled particles.

When replacing fibrous packing, thoroughly clean the stuffing box of old packing and grease. Cover each piece of new packing with the recommended lubricant. Separate the new rings at the split joint to place them over the shaft. Place one ring of packing at a time in the stuffing box and tamp firmly in place. Stagger the joints of each ring so they will not be in line. After the last ring is in place, assemble the gland and tighten the nuts evenly until snug. After a few minutes, loosen the nuts and re-tighten them finger-tight [2].

Reciprocating Type Compressors: Cylinder jackets of water-cooled compressors should be cleaned annually with water. Dirt accumulations interfere with water circulation. Cleaning can be accomplished using a small hose nozzle to get water into the jackets. For

compressors fitted with mechanical lubricators, cylinders may be cleaned with a nonflammable cleaning fluid.

Replace all defective valve parts as required. When a valve disk or plate wears to less than one-half its original thickness, it should be replaced. Valve seats may be resurfaced by lapping or regrinding. On some valve designs it is necessary to check the lift after resurfacing. If the lift is found to be more than that recommended by the manufacturer, the bumper must be cut down an equal amount. Failure to do this results in more rapid valve and spring wear. Carbon deposits should be removed and the valve assembly washed in nonflammable cleaning fluid. Before replacing valves, make sure the valve seat and cover plate gaskets are in good condition. If any defects are found, replace the gaskets. Make sure the valve is returned to the same port from which it was removed. Carefully follow the manufacturer's instructions for valve removal and replacement

When replacing worn piston rings, the new rings must be tried in the cylinder for fit. If the cylinder wall is badly scored or out of round, re-bore the cylinder, or if cylinder liners are fitted, replace them. If necessary to file for end clearance, take care to file the ends parallel. Clean the ring grooves and remove any carbon deposits before installing the new rings. Make sure the ring is free by rotating it in its groove. Stagger the ring gaps of succeeding rings so they are not in line. Use a ring clamping device when reinstalling the piston. If this is not available, wire the rings tightly so they enter the bore easily. Consult the manufacturer's instructions for carbon ring replacement.

Always check piston end clearance after replacing pistons or after adjustment or replacement of main, crankpin, wristpin, or crosshead bearings. Consult the manufacturer's instructions for proper clearances and method of clearance adjustment. To measure piston end clearance, insert a length of l/B-inch diameter solder into the cylinder through a valve port and turn the compressor over by hand so that the piston moves to the end of its stroke. Remove the compressed solder and measure its thickness to determine the piston end clearance [2].

Rotary Screw Type Compressors: Timing gears maintain the compressor impellers in proper rotative position and hold impeller clearances. They must be securely locked to their shafts in proper position. Gears or impellers that have been removed for repair must be returned to their original positions. When installing new or repaired parts, carefully follow the manufacturers' instructions for setting clearances. Clearances must be set accurately or damage to the machine may result from impeller rubbing.

Rotary twin-lobe compressors are normally fitted with mechanical seals. Seals should be kept free of dirt, dust, and foreign matter to ensure long life. Sealing faces are lapped together during manufacturing and the entire assembly must be replaced when defective

seals are found. Use extreme care when installing seals to prevent marring of the sealing faces. Be sure that the lapped sealing faces are free of scratches, dust, or finger marks before installation. Carefully follow the manufacturers' instructions when replacing mechanical seals.

Rotary twin-lobe compressors are normally fitted with anti-friction ball or roller bearings. Worn or defective bearings should be replaced. Wear to bearings may allow the impeller shaft to shift position until a cylinder rub develops or the impellers begin rubbing. Carefully follow the manufacturers' instructions when replacing bearings.

Leave sufficient space around the compressor to permit routine maintenance. It is also suggested to provide space for the removal of major components during compressor overhauls. Be sure to provide sufficient ventilation for all equipment that may be installed in the compressor room. All compressor manufacturers publish allowable operating temperatures [2].

4.0 Metrics, Monitoring and Analysis

4.1 Measures of Performance, Condition, and Reliability

Leakage of compressed air is a problem at any installation and, if not corrected, will result in significant monetary losses. Leakage can result from corrosion in underground piping, damaged joints, and defective fittings and valves. A relatively simple test has been devised which rapidly and economically determines whether a distribution line is leaking and if so, the magnitude of the losses.

A common measure for evaluation of losses in compressed air systems is listed below:

In determining the air losses, use the following mass loss formula [2]:

$$Q = \frac{35.852\,V}{(T+460)(t_f - t_i)}(P_i - P_f)$$

Where: Q = volumetric airflow (scfm)

V = volume of tank, ft^3

T = temperature, °F

P = pressure, psig

t = time, minutes

i = initial

f = final

In standard ISO 1217:2009 [9], a formal displacement compressor test is detailed as well as the measurement equipment and methods are defined. These are utilized in a defined performance test procedure.

4.2 Data Analysis

The following steps must be performed to complete a pressure decay test:

- Obtain scale drawings of the section to be tested. Verify drawings in the field and calculate the volume of the section to be tested.
- Install a pressure gauge at a convenient location.

- Secure all loads the line supplies.
- Isolate the line from the compressed air system.
- Immediately begin taking readings at the pressure gauge but do not commence the data readings the moment the valve is closed. Observe the pressure gauge and begin timing when the pointer passes a convenient mark. Example: On a 100 psig system, wait for the pressure gauge to reach 95 psig before starting the stopwatch.
- Note the time at convenient pressure intervals (5 or 10 psi increments). Continue data recording until 20 psig is reached.
- Using the field data, construct a chart as shown in table (Figure 10). The LOSS column values (Q) are calculated by using the field data in formula above.

Pressure (psig)	Average Pressure (psig)	Time (min:sec)	Time (min)	Loss (scfm)
90-80	85	10:42	10.70	40
80-70	75	23:17	23.28	34
70-60	65	38:34	38.57	28
60-50	55	58:56	58.93	21
50-40	45	87:28	87:47	15
40-30	35	135:01	135.02	9
30-20	25	277:40	277.67	3

Figure 10: Typical Calculation of Losses Table

- On graph paper, plot Q on the Y axis and P on the X axis.
- Using linear regression, calculate the equation for the best fitting straight line (Figure 11) and solve for $Q_{nominal}$. $Q_{nominal}$ is defined as normal operating pressure [2].

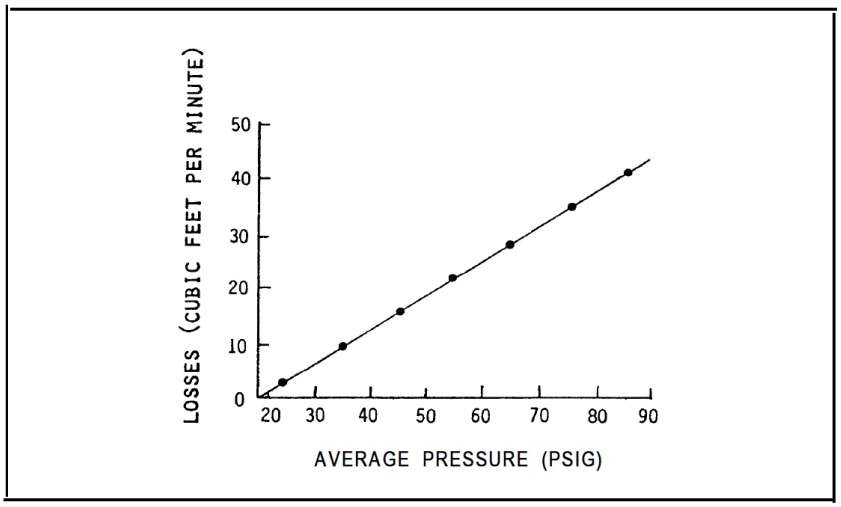

Figure 11: Typical Loss (cfm) vs. Pressure (psig) graph

Analysis of test data (test report) is also defined in standard ISO 1217 [9].

4.3 Integrated Improvements

$Q_{nominal}$ represents the loss in the compressed air system at operating conditions, assuming a constant pressure over the length of pipe in question. This value, taken with the activity's cost to produce compressed air, can be used as justification to develop projects to repair or replace sections of compressed air line.

Interpretation of test data and recommended actions are also defined in ISO 1217:2009 [9].

5.0 Information Sources:

Baseline Knowledge:

1. ASME, *The Guide to Hydropower Mechanical Design*, HCI Publications Inc.,- 1996

State of the Art:

2. USN, Maintenance and Operation of Air Compressor Plants, NAVFAC MO-206, Naval Facilities Engineering Command – 1989
3. USACE, M.C.J. Lin and Y. E. Taha, *Applications Guide for Compressed Air Systems TR-01-65*, Engineer Research and Development Center. - 2001
4. USACE, *Hydro Plant Risk Assessment Guide, Appendix E10 Compressed Air Systems Assessment* - Sept. 2006.
5. USACE, *Hydroelectric Power Plants Mechanical Design EM 1110-2-4205 Chapter 13 Compressed Air Systems* – June 1995
6. Atlas Copco Airpower NV, *Compressed Air Manual 7th Edition* - 2010
7. eCompressedair.com, *Compressed Air History*, http://www.ecompressedair.com/library-pages/compressed-air-history.aspx – 2012
8. Forsthoffer, W., E., *Best Practice Handbook for Rotating Machinery* – 2011

Standards:

9. ISO 1217:2009 *Displacement compressors - Acceptance tests - Fourth Edition* – 2009
10. ASME, *Boiler and Pressure Vessel Code VIII Div 1, Rules for construction of pressure vessels* - 2010

It should be noted by the user that this document is intended only as a guide. Statements are of a general nature and therefore do not take into account special situations that can differ significantly from those discussed in this document.

Best Practice Catalog

Generator

Revision 2.0, 8/06/2012

1.0 Scope and Purpose

The document for the generator switchgear addresses its technology, condition assessment, operations, and maintenance best practices with the objective to maximize the unit performance and reliability. This best practice is limited to medium voltage (MV) generator breakers and associated switchgear when connected between the main generator terminals and the low voltage generator step-up (GSU) windings. Unit connected generators utilizing high voltage (HV) breakers are not included.

The primary purpose of the generator switchgear is to provide load switching (synchronizing the generator to the system) and fault interrupting capabilities. The switchgear includes the switching or interrupting device (breaker) and associated enclosure, buswork, control, and instrumentation. The switchgear may also include metering and protective devices.

The manner in which the generator switchgear is designed, operated, and maintained can significantly impact the reliability of a hydropower unit.

1.1 Hydropower Taxonomy Position

Hydropower Facility → Powerhouse → Power Train Equipment → Generator Switchgear

1.1.1 Generator Switchgear Components

Switchgear is a general term that in this application refers to the interrupting devices that control and protect the flow of the generator output power. These devices include the circuit breaker and may include instrument transformers, control devices, and surge protection. The circuit breaker, depending on the type and vintage, may be freestanding or installed in metal clad switchgear which has the following characteristics as defined by ANSI [11]:

- Switching and interrupting devices are removable
- Energized parts are compartmentalized
- Compartments are isolated from each other
- Medium voltage bus is insulated
- Accessible from front and rear
- Shutters isolating the breaker compartment from the live bus when the breaker is withdrawn are required

Figure 1: Typical Switchgear

Figure 1 shows a typical indoor switchgear line-up with the breaker removed from its compartment.

Arc resistant switchgear, designed to withstand the effects of an internal arcing fault, has been developed and is offered by some manufacturers.

Breaker: The primary component of medium voltage switchgear is the circuit breaker. The main function of the breaker is to either connect or disconnect the generator to the system through the GSU or to interrupt generator or system sourced fault currents. The breaker may be an oil, air-magnetic/air blast, vacuum, or Sulphur Hexaflouride (SF_6) type depending on the arc interrupting medium and technology.

Oil circuit breakers were among the first breakers implemented and are primarily used in outdoor applications. Although they were discontinued in generator breaker applications starting in the 1940's, they may still be found in older hydro plants. Oil circuit breakers have contacts located in an oil tank with an operating mechanism usually located outside the tank.

Air-magnetic or air blast breakers utilize a combination of one or more of the following techniques for fault interruption: 1) high pressure air blast, 2) arc elongation, 3) arc constriction, 4) arc restraining metal barriers, or 5) magnetic blowout. These techniques are used to extinguish the arc resulting when the contacts separate (breaker opens). These breakers are spring operated and usually installed in metal clad switchgear. They are completely removable for maintenance, testing and inspection. Rack out breakers may connect either vertically or horizontally with the main bus.

Vacuum breakers employ contacts in a vacuum bottle with a near perfect vacuum to interrupt current flow. The contact geometry can vary, based on the application, to reduce contact wear, improve arc interruption at zero current, and to reduce pre-strike and restrike occurrences. The current carrying contacts are not accessible on these breakers. Figure 2 shows one phase of a medium voltage sealed vacuum interrupter.

Figure 2: Vacuum Circuit Breaker Interrupter

SF_6 utilizes design concepts similar to vacuum circuit breakers except the contacts are inside a bottle filled with sulphur hexafluoride for arc extinguishing. Modern SF_6 switchgear typically houses the bus and circuit breaker in the SF_6 medium resulting in a compact and arc resistant assembly. SF_6 breakers may be freestanding or installed in metal clad switchgear.

In 1989 the IEEE [6 and 7] first developed a standard recognizing the significant differences between standard distribution class breakers and true generator breakers. The purpose of the document was to set standards required by the severe operating conditions for generator circuit breakers. The current interruption basis of an ordinary distribution short circuit type breaker is that for relatively short time increments the symmetrical short circuit current has a constant value with a direct current (DC) offset determined by circuit conditions at the time of the fault. This DC component, or offset, has a rate of decay determined by the system reactance (X) to resistance (R) ratio (X/R). Both IEEE and ANSI define this ratio as 17 for distribution applications with a time constant of 45 ms; whereas, in a generator application the ratio is much higher due to the generator and transformer reactance. Ratios of 50 or more with a time constant of 133 ms are common for generators. This means that the DC component of current in a generator application at the instant of interruption is much larger than it would be in a distribution application. Another significant difference is the potential for a transient recovery voltage (TRV) across the interrupter contacts. In a generator application, this is 3 to 4 times higher than it would be in a distribution class breaker. Also, as a generator is brought to frequency and voltage in preparation to synchronize, there are instants when the voltage across the open breaker contacts can theoretically be 180 degrees out of phase.

Instrument Transformers: These transformers are typically included with the generator switchgear or installed on the generator bus external to the gear. They reduce the medium voltage and high currents to low values usable for metering, relaying, and regulating circuits. Voltage is transformed or “stepped-down” by the potential (PT) or voltage (VT) transformer. The primary winding is usually connected line-to-line or line-to-neutral and is isolated from the secondary control circuits which are normally 120 VAC. The PT’s

should be a drawout-type with current limiting fuses on the primary. The current transformer (CT) is often a toroid (doughnut) type where the primary winding, or generator lead, passes through the center or it may be a busbar type where a section of the generator bus forms the primary winding. CT ratios should be selected to coordinate with their associated protective devices and should be adequate for steady state normal load currents as well as fault currents. The CT should have a mechanical rating equal to the momentary rating of the switchgear and be insulated for the full voltage rating. Both PT and CT accuracy / burden selection should be based upon the application and loads served (relaying and/or metering).

Surge Protection: Capacitors, surge arrestors, or both may be included to protect the insulation of the generator. The best practice is to install surge protection at the generator terminals although it is common that these devices be included in the switchgear or be installed on the external bus. Outside units or units with outside bus arrangements should be provided with surge protection designed to maintain voltage surges below the insulation level of the protected equipment.

Auxiliary Cooling: Supplemental cooling may be included to achieve the required ratings while maintaining prescribed temperature limits.

Buswork: Aluminum or copper busbars (or cable) may be used to connect the line and load sides of the breaker. In metal clad switchgear this bus will be insulated. Buswork and cables must be rated for the voltage, continuous, and momentary ratings of the breaker.

1.2 Summary of Best Practices

1.2.1 Performance/Efficiency & Capability – Oriented Best Practices

- Periodic verification of torque for bolted bus connections.

1.2.2 Reliability/Operations & Maintenance Oriented Best Practices

- Circuit breakers need periodic exercise. If the breaker remains open or closed for 2 months or more, it should be opened and closed several times to verify smooth operation.
- Instrument transformer accuracy and burden ratings shall be adequate for the relaying and/or metering loads they serve.
- Inspect circuit breakers after severe fault interruptions
- All openings should be sealed against weather or vermin intrusion.
- Breakers should have trip circuit monitoring and either redundant trip coils or a breaker failure scheme to trip upstream breakers depending on the plant configuration.

- Verify circuit breaker ratings are adequate for updated capacities and fault.
- Remote racking devices should be provided and utilized as a safety feature for operations and maintenance personnel.

1.3 Best Practice Cross-references

Electrical – Generator Best Practices

2.0 Technology Design Summary

2.1 Material and Design Technology Evolution

Original applications have been dominated by oil and air interrupting technologies. The primary disadvantages of these technologies are that they are both bulky and require high maintenance. The disadvantages and requirements for higher ratings led to the later development of first SF_6 and then vacuum technologies. Each interrupting technology described above has followed its own time-line as manufacturers continued to refine the product for higher capacity, reliability and reduced physical size. Air and oil technologies have been replaced by vacuum and SF_6 over a 40 year period starting in the early 1970's.

In the oil-type circuit breaker, the interrupter is immersed in insulating oil as the arc quenching medium. This was a dominate circuit breaker type until the 1960's. In this design, contacts are configured and timed so that the pressure generated by the arc at the initial separation point forces oil through a secondary contact to both cool and extinguish the arc. Although there are variations on the design of oil circuit breakers, all use this principal for fault interruption. Flammability, environmental, and high maintenance factors are some disadvantages of the oil circuit breaker.

Early air circuit breakers were simply plain break switches which stretched the arc between a set of stationary and movable contacts with no arc control. Consequently, arc times were long, contact wear was high, and ratings were limited. Performance was improved by the inclusion of arc control devices with the arc chute being the most common device. Air blast or air magnetic type circuit breakers use air as the dielectric and arc quenching medium. While simplicity of design, ease of inspection, and relatively low initial cost are advantages of the air-type; and high maintenance and use of air as an insulating and extinguishing medium are disadvantages. Another disadvantage of both air and oil type breakers is that as these types have been supplanted by the SF_6 and vacuum technologies, locating replacement parts and servicing has become difficult.

SF_6 breakers were first used in the United States in the early 1950's. Puffer-type, where the relative movement of a piston and cylinder is used to generate a compressed gas for arc extinction, was introduced in 1957. Since that time, developments in SF_6 breaker technology have made them more robust, quieter, and more reliable than some of the other technologies. As the contacts in the puffer-type (single pressure) SF_6 breaker separate, the difference in pressure between the hot gas (caused by the arc) and the cool gas causes a flow that cools the breaker pole and sweeps the arc from the contacts. In earlier SF_6 breakers, a blast of high pressure gas from a pressurized tank was used to extinguish the arc. While SF_6 itself is non-toxic, the by-products created by arc interruption are considered toxic. Also, SF_6 has been identified as a green house gas and therefore potentially an environmental concern.

Vacuum interrupters became available in the early 1970's. An advantage of the vacuum interrupter technology is that the arc is maintained at a minimum since there is nothing in the extinguishing medium (except contact material) to ionize and the vacuum itself is a superior

dielectric. Contact erosion is minimal. Vacuum circuit breakers have lower mechanical requirements due to their smaller size and shorter stroke and are simpler in design than the other technologies.

2.2 State of the Art Technology

As previously mentioned, SF_6 and vacuum technologies are now preferred for their many advantages over oil and air type circuit breakers. Manufacturers continue to make improvements to both SF_6 and vacuum breakers.

An increased interest in personnel safety has lead to the recognition of arc flash hazards associated with medium voltage switchgear by OSHA, NFPA and IEEE. Each of these organizations has addressed the concerns by developing standards governing arc flash hazards [13, 14, 15, and 16]. IEEE defines accessibility types of arc resistant gear with Type 1 and Type 1C having arc resistant features at the freely accessible front of the equipment and Type 2 and 2C include these features on all sides. The "C" indicates the inclusion of arc resistant features between adjacent compartments. Arc resistant switchgear includes more robust construction to contain the fault energy, special venting to also contain the fault energy and channel the exhaust gas, and closed door circuit breaker racking and operation features. Venting of the exhaust (arc energy) should be such that it will not present a personnel hazard or jeopardize other equipment. While arc resistant switchgear may certainly play a role in providing a safer employee workplace and represents a "state of the art technology" when applied in conjunction with proper training, job planning and tools, it is currently not a requirement of any governing authority.

As previously mentioned IEEE standards [6 and 7] now recognize the distinction between distribution class and generator class circuit breakers. In practice, a "generator" circuit breaker must be able to withstand phase displacements prior to synchronizing and following trips, withstand transient recovery voltages not seen on normal distribution systems, break strong and highly asymmetrical fault currents (delayed current zeroes), and withstand continually high load currents.

3.0 Operation & Maintenance Practices

3.1 Condition Assessment

In addition to the visual inspections and tests performed as routine maintenance, a number of other factors are considered to assess the breakers. The assessment should consider the age, number of operations, history, and type of environment. The United States Army Corps of Engineers (USACE) [3] provides a very detailed, multi-tiered approach to the assessment of generator circuit breakers. While this assessment considers technological factors in the scoring, overall assessment and scoring contained herein provides a methodology to use when the detailed information required by the USACE guide may not be available.

Electrical testing constitutes one facet of the condition assessment. Testing should be performed per the manufacturer's guidelines regarding method. Frequency of testing will be determined by the manufacturer's recommendations and operating experience. For example, depending on the severity of the fault, breakers should be considered for inspection following fault interrupting duty. Breakers that are cycled multiple times during a 24 hour period should have operating mechanism inspections more frequently than those operated on a weekly basis. For the electrical test, manufacturers will provide specifications for insulation resistance (rule of thumb is 1 megohm per kV + 1 megohm), contact resistance, and timing. Hi-potential testing confirms suitability for operation at rated voltages and can be used to ensure vacuum interrupter bottles have maintained their vacuum. Breaker control checks should include verification of trip and close at minimum control voltage.

The condition assessment should evaluate the breaker's interrupting current rating against the maximum available fault current. As originally supplied, the breaker most likely had extra capacity to allow for system growth. Changes in system conditions, generator step-up transformer impedances, or unit capacity may have increased available fault current to a point that may exceed the breakers rating. If the current available fault current exceeds the breakers capacity, failure of the breaker and excessive collateral damage is possible. In this case, corrective action to increase the breakers capacity or decrease available fault current is required.

3.2 Maintenance

Maintenance requirements are largely influenced by the service duty, complexity of design and operating environment. Because of wide variations in these factors, each operator should develop maintenance schedules based on operating experience and the manufacturer's recommendations. Maintenance recommendations for each type of breaker will vary due to design details and manufacturer. Basic maintenance should include the following:

- Check the operating mechanisms of all types of breakers for freedom of movement, wear, and proper lubrication as recommended by the vendor.
- Racking devices, if applicable, should be checked for wear and freedom of movement.
- Check auxiliary position switches (MOC and TOC) for actuation and continuity.

- Check electrical sliding and pressure-type contact points for continuity.
- Perform visual inspection of switchgear components for obvious defects.
- Ensure all electrical connections are tight. Perform infrared scans, if possible, of bolted and plug in connections.
- As with all electrical devices for all types of breakers, cleanliness is essential.
- Both indoor and outdoor switchgear and breakers should have physical barriers (screens, filters, etc.) to prevent intrusion by vermin and environmental contaminates.
- Thermostatic controls should be verified for function.

Oil circuit breakers are unique in that the interrupting medium, oil, is subject to deterioration every time the breaker operates with load; therefore, requiring periodic quality testing and refurbishment or replacement. Main and arcing contacts require inspection and are subject to more wear than either SF_6 or vacuum breaker contacts. Since their contacts are immersed in oil, they are not visually accessible during routine maintenance. Contact engagement may be determined by measuring the travel of the operating mechanism. In addition to the aforementioned, inspection for leaks is required. These breakers are usually freestanding (i.e. not metal enclosed or metal clad).

Air magnetic and air blast breakers are both air insulated. Air blast breakers use high pressure air to operate the breaker and extinguish the arc and may not be removable for maintenance. For both air insulated breakers, the main and arcing contacts require periodic inspection. All components of the operating mechanism should also be checked for proper operation, lubrication, excessive wear, and missing or broken hardware. The pressurized air system of the air blast breaker should be inspected and tested per the manufacturer's recommendations and as a minimum any leaks should be identified and repaired.

Vacuum breakers typically require less maintenance than the other types. As with SF_6, the interrupters are sealed so no contact cleaning is necessary (or required) since the arc is interrupted in a vacuum. Normally the operating rod is scribed with a mark whose position with the contacts closed is noted and compared to a reference. These breakers usually have fewer operating parts and operate at lower forces than the other types, and are therefore likely the most reliable. Some manufacturers consider their vacuum breakers to be maintenance free during an operational life of 10,000 switching operations.SF_6 load contacts will not normally be accessible but contact engagement may be determined by travel of the operating mechanism. Practical experience with SF_6 has shown that sealed interrupters may not require servicing and are typically suitable for as many as 50 short circuits (depending on severity) and several thousand full load interruptions before replacement is required. Continuous cast epoxy envelopes and special seals have almost eliminated any maintenance requirements for the interrupters. It should be noted that high temperature decomposition of SF_6 gas leads to the generation of toxic byproducts. If powdery substances are encountered during maintenance of SF_6 breakers or interrupters, they should not be inhaled or handled.

4.0 Metrics, Monitoring and Analysis

4.1 Data Analysis

Reliability data to analyze includes all electrical test data collected and comparisons to the manufacturer's specification. If performed regularly, the data can be trended, especially contact resistance and contact open/close timing tests.

A comparison of available short circuit current with the breakers interrupting capability should be made. To accomplish this, an up-to-date short circuit study must be available and the circuit breaker interrupting rating known. The circuit breaker rating methods have evolved from rating the breaker on a "total" current basis to a symmetrical current basis for newer breakers. "Total' current included the DC offset of the AC symmetrical current. The standards using this rating basis have been superseded although there are probably still breakers in service that carry these ratings. Newer standards consider the rated short circuit current as the highest value of the symmetrical component of the short circuit RMS of the current envelope. In the event a breaker rated on a total current basis is replaced, a conversion to the rated symmetrical current basis is performed as follows:

Note: This conversion should be approved by the prospective supplier.

Rating based on symmetrical current = Total current rating x [nominal voltage/rated maximum voltage] x F

F = 0.915 for a 3 cycle breaker

= 0.955 for a 5 cycle breaker

= 1.0 for an 8 cycle breaker

4.2 Integrated Improvements

Vacuum and SF_6 type circuit breakers offer numerous advantages over air and oil type circuit breakers. These technologies offer smaller size, higher reliability, and reduced maintenance cost. The most critical improvement is to ensure that the capacity of any breaker should offer some margin over the expected worst case fault current. Any changes to the power system made since the installed breaker was specified may challenge its interrupting capacity and should be analyzed. The required capacity can be realized with any of the types discussed in this BP. Modernization or upgrade of the switchgear may be accomplished either by a complete replacement or a retrofit of existing switchgear with new circuit breakers (interrupters).

5.0 Information Sources

Baseline Knowledge:

1. Siemens, *Tech Topic No. 71, Generator Circuit Breakers*
2. Siemens, *Tech Topic No. 72, Generator Circuit Breakers*
3. USACE, Hydro Plant Risk Assessment Guide, Appendix E2, Circuit Breaker Condition Assessment
4. TVA, Design of Projects Technical Report No. 24 Electrical Design of Hydro Plants
5. Electric Power Research Institute, Power Plant Electrical Reference Series, Vol. 7, Auxiliary Electrical Equipment

State of the Art:

6. *Energy Tech Article Hydroelectric Power Station Nears Completion of Challenging Switchgear Project, June 2009*
7. *17th Annual Conference on Electricity Distribution, Vacuum Interrupters for Generator Circuit Breakers, They're Not Just for Distribution Circuit Breakers Anymore", May 2003*

Standards:

8. *IEEE, STD C37.013 Standard for AC High Voltage Generator Circuit Breakers Rated on a Symmetrical Current Basis*
9. *IEEE, STD C37.013a Standard for AC High Voltage Generator Circuit Breakers Rated on a Symmetrical Current Basis – Amendement 1 : Supplement for Use with Generators Rated 10-100 MVA*
10. *IEEE, STD C37.010 Application Guide for AC High Voltage Circuit Breakers Rated on a Symmetrical Current Basis*
11. *ANSI, C37.06 AC High Voltage Circuit Breakers Rated on a Symmetrical Current Basis-Preferred Ratings and Required Capabilities*
12. *ANSI, C37.20.7 – IEEE Guide for Testing Metal Enclosed Switchgear Rated Up to 38 kV for Internal Arcing Faults*
13. *ANSI, C37.20.2 – IEEE Standard for Metal Clad Switchgear*
14. *ANSI, C37.04 – IEEE Standard Rating Structure for AC High-Voltage Circuit Breakers Rated on a Symmetrical Current Basis*
15. *IEEE Std C37.20.7 Guide for Testing Metal-Enclosed Switchgear Rated Up to 38 kV for Internal Arcing Faults*
16. *OSHA 29 Code of Federal Regulations (CFR) Part 1910, Subpart S*
17. *NFPA 70E, "Standard for Electrical Safety Requirements for Employee Workplaces"*
18. *IEEE 1584, Guide for Arc Flash Hazard Analysis*

It should be noted by the user that this document is intended only as a guide. Statements are of a general nature and therefore do not take into account special situations that can differ significantly from those discussed in this document.

Best Practice Catalog

Main Power Transformer

Revision 2.0, 8/06/2012

1.0 Scope and Purpose

This best practice for the Main Power Transformer (MPT) discusses design components, condition assessment, operations, and maintenance best practices with the objective to maximize overall plant performance and reliability.

The primary purpose of the main power transformer is to step up the generator output to a higher voltage for efficient transmission of energy. The MPT is a critical component of any generation station. As the MPT connects the generator to the transmission grid, the output of the generator is directly dependent on the availability and operational status of the transformer. Thermal and electrical limits of the transformer must be considered for reliable long term operation. Proper design, operation, and maintenance are required to provide the utmost efficiency, performance and reliability of the hydro unit.

1.1 Hydropower Taxonomy Position

Hydropower Facility → Powerhouse → Power Train Equipment → Transformer

1.1.1 Main Power Transformer Components

The primary components of the MPT related to performance and reliability consist of a core, windings, dielectric insulation system, bushings, and external cooling system.

Core: The core functions to provide an optimal path for the magnetic flux and efficiently magnetically couple the windings. The core of a transformer is comprised of thin magnetic laminations stacked together and tightly clamped into place by a steel clamping structure. Each lamination is provided with a thin coating of insulating varnish to insulate each lamination from the adjacent lamination. On core form transformers, the clamping structure is electrically insulated from the core laminations and within the structure itself with one intentional core ground provided. The insulation of the laminations and clamping structure reduces eddy currents and unwanted circulating currents within the structure. Shell form transformers are not provided with a single point core ground by the nature of their design. Cores can be designed as either single phase or three phase configurations depending on capacity and user requirements.

Windings: The windings function as the conducting circuit for the transformer and consist of turns of insulated wire or cable which are placed around the magnetic core. Various configurations of winding construction and conductor transpositions are utilized to increase the efficiency of the windings. Each winding conductor and each winding assembly is insulating from one another as well as from ground potential. A primary and a secondary winding are used in a typical two-winding MPT. The alternating current that flows through the primary winding establishes a time-varying magnetic flux, some of which links to the secondary winding and induces a voltage across it. The magnitude of this voltage is proportional to the ratio of the number of turns on the primary winding to the number of turns on the secondary winding. This is known as the “turns ratio”. Most MPT’s are provided with a tap winding, typically part of the secondary high voltage winding, which connects winding leads to a tap changer mechanism allowing the user to adjust the turns ratio to closely match

the system voltage so as to prevent over-excitation of the transformer. The tap changer mechanism may be of the de-energized type (DETC) which can only be operated with the transformer completely de-energized or may be designed for on-load tap changing operation (OLTC). OLTC's are far more complex devices, require additional maintenance, and add considerable cost to the transformer. The windings and tap configuration of a MPT allows the low voltage input to be converted to higher voltages providing for efficient transmission of electric power.

Dielectric Insulation System: The dielectric insulation system consists of both solid and liquid dielectric materials. The purpose of this system is to insure that the windings, conductors, and core remain electrically insulated from one another and from ground potential. The solid dielectric insulation system can consist of various materials including electrical grade cellulose, Nomex®, pressboard, wood, and insulating varnishes and films. The liquid insulation consists of an insulating fluid, normally a highly processed mineral oil, which provides for the dielectric properties and protection of the solid insulation as well as serving as the cooling medium for the transformer. The insulating oil minimizes oxidation of cellulose and serves as a deterrent for chemical attacks of the core and windings. The quality and life of the solid insulation system is highly dependent on the quality of the liquid insulating fluid.

Bushings: The function of the bushings is to provide a path for current flow from the windings inside the transformer to external connections while maintaining the dielectric integrity of the voltage-to-ground clearance required. A central conductor passes through an insulator which can consist of porcelain, resin, or polymer material. The inside of the bushing may contain paper and foil layers, film, or ink to create a low value capacitance to grade the voltage between the conductor and ground. Bushings may be filled with insulating oil or may be resin impregnated, particularly at higher voltages, and are known as capacitor type bushings. Capacitor type bushings are usually provided with a test or voltage tap to allow testing of the capacitor layers. Lower voltage bushings may consist of only a central conductor and an insulator.

External Cooling System: The purpose of the external cooling system is to remove the heat generated by power losses within the transformers and maintain operation of the components within design temperature parameters. The removal of heat protects the windings, core, and dielectric system from thermal degradation, critical for the reliability of the transformer. The heat losses are transferred to the insulating fluid which is circulated through external systems to remove the heat and return cooler fluid to the transformer. The external cooling system can be comprised of radiators, coolers, fans, motor driven pumps, and/or water cooled heat exchangers based on the design and capacity requirements of the transformer.

Non-performance, but reliability related components of a MPT include the tank, oil preservation system, and controls/protective devices.

Tank: The purpose of the tank is to provide a sealed container to house the core, winding assembly, and the insulating fluid. The tank is usually made of welded steel construction and is provided with removable inspection covers. The bushings are mounted to the tank for electrical connection of the transformer windings to external bus. Auxiliary equipment such as controls, protective devices, oil preservation systems, and cooling system components are usually attached to the tank.

Oil Preservation System: The purpose of the oil preservation system is to prevent moisture, atmospheric air, and other contaminates from entering into the tank and contaminating the insulating system. This minimizes oxidation and deterioration of the dielectric insulation system both chemically and electrically. There are various types of oil preservation systems including gas sealed, pressurized inert gas sealed, free breathing, and sealed conservator type systems.

Controls/Protective Devices: Controls and protective devices are equipment required for operation of the transformer. Instrumentation is also part of the control system. They provide for manual and automatic control of the cooling system, monitoring of temperatures, on-line monitoring (i.e. dissolved gas and moisture), trip and alarm functions, and power supply transfers. The controls are usually housed in a cabinet mounted to the transformer and are connected to the various devices. The protective devices can vary based on the user's specifications and include such items as pressure relief devices, rapid rise fault pressure relays, temperature monitors, various on-line monitors, and lock out systems for tap changers.

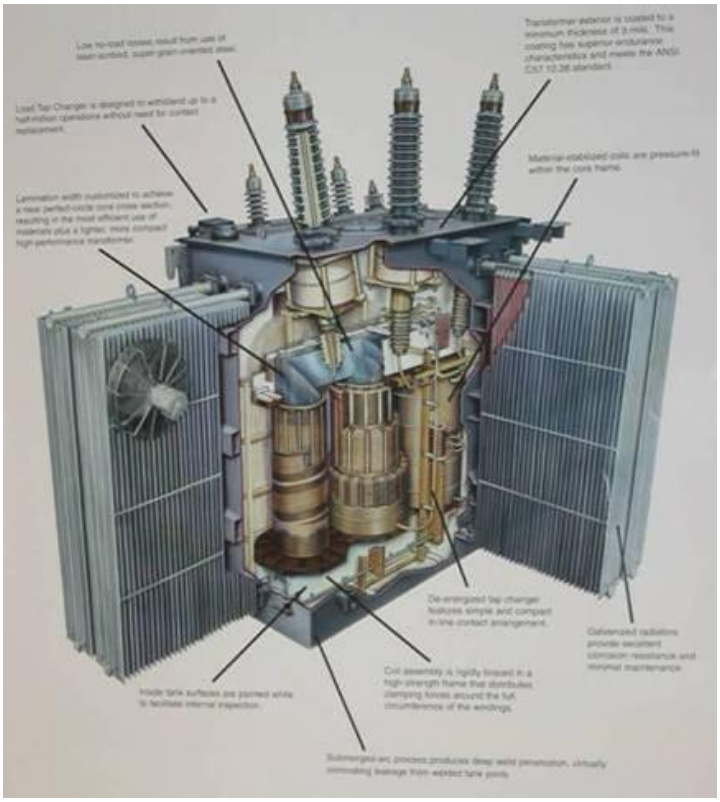

Figure 1 - Components of a MPT (Core Form)

1.2 Summary of Best Practices

1.2.1 Performance / Efficiency & Capability - Oriented Best Practices

The performance levels of the MPT can be defined as follows:
The Installed Performance Level (IPL) is the performance capabilities of the transformer determined during OEM factory testing and at commissioning. These capabilities may be validated by comparison of factory test reports and field electrical test data prior to initially placing the transformer in service.
The Current Performance Level (CPL) is determined by an accurate analysis of the transformers operating characteristics. These would include thermal performance at full load as well as component condition or test deviations or limitations discovered.
Determination of the Potential Performance Level (PPL) typically requires interface with vendors for new transformer design, loss information, and cost in order to evaluate the achievable performance potential of replacement transformer(s).

Best Practices include:

- Routine testing to verify performance within the original design criteria and factory test baseline data.

- Maintain operation of the transformer within its thermal and capacity limits.
- Insure that temperature and loading limits are maintained by operation personnel and that alarms are responded to in a timely manner. Winding temperatures should be constantly monitored and trended. Increased temperature trends should be investigated to determine cause.
- All alarms and/or trips should be investigated and considered valid until proved otherwise.
- Real-time monitoring and analysis of transformer performance at Current Performance Level (CPL) to detect and mitigate deviations from design parameters for the Installed Performance Level (IPL) due to system degradation, thermal issues, or malfunction of instrumentation.
- Maintain documentation of IPL and update if major modifications are performed (e.g., winding replacement, cooling system upgrades, oil reclamation).
- Periodic comparison of the CPL to the IPL to monitor deterioration and trigger maintenance or repair. This is especially important regarding routine field electrical test results and oil analysis.
- Trend transformer performance and test data for early detection of deterioration, contamination, thermal degradation, and incipient faults.
- Include industry acknowledged choices and experience for transformer design, replacement components, and maintenance practices to plant engineering standards.

1.2.2 Reliability / Operations & Maintenance - Oriented Best Practices

- Establish a comprehensive dissolved gas-in-oil analysis (DGA) testing program to monitor the internal health of the transformers insulation system, as well as other components. Accurate analysis and trending of analytical data can provide early detection of thermal and electrical incipient faults, insulation degradation, and allow for intervention and mitigation measures. On-line monitors are available for real time analysis.
- Maintain an insulating oil quality testing program to timely monitor the chemical and electrical condition of the insulating fluid. Degradation of the insulating fluid leads to degradation of the solid insulation system which can lead to failure. Enhanced testing processes for furanic compounds, particle analysis, dissolved metals, corrosive sulfur, etc. can assist in determining life and maintenance criteria. It should be understood that the life of the insulation system is the life of the transformer.
- Insure that a dry insulation system is maintained. When indicated, appropriate and efficient field dry out processes should be used.
- Implement a routine field electrical testing program and track and trend critical data. Establish action limits to correct defects found during tests prior to placing the transformer back in-service. Thoroughly document findings and corrective action taken.

- Implement a thermographic inspection program and trend results of individual components and families.

- Insure operation of the MPT within its design voltage limits, typically 105% sustained to avoid damaging over-excitation issues. Adequate voltage taps should be provided to adjust to any feasible system condition to prevent this situation.

- Consider specification limits on new transformers on allowable flux density. Modern transformer designers typically design to 110% maximum of nominal voltage. Some user specifications will place limits on the allowable flux density at this elevated excitation voltage. One user requires 1.7 Tesla maximum at 110% nominal voltage.

- Operate the transformer within its thermal design limits to prevent accelerated thermal aging and damage to the winding and lead insulation system and bushings.

- Investigate all oil or nitrogen leaks and determine the need and priority for repair.

- Maintain the cooling and oil preservation system with a preventative maintenance program as these systems protect the transformer from damaging heat, moisture, and atmospheric air.

- Consider modernizing free breathing oil preservation systems to sealed conservator systems

- Consider replacing desiccant breathers with maintenance free breathers on conservators and OLTC's

- Use on-line OLTC systems to maintain improved integrity of the insulating fluid and internal OLTC components.

- Trend bushing condition and replace when significant deterioration is indicated by comparing all electrical test values to individual bushing nameplate data. Replace bushings with known high risk for failure rates. On-line bushing monitors can provide real time bushing condition.

- Recondition or reclaim insulating oil when trend analysis indicates need. Develop specifications for the type and grade of insulating oil to be used in user's transformer.

- Test and calibrate controls and indicating devices and upgrade when required.

- Insure availability of on-site or system wide spare transformer(s) and spare parts to reduce the forced outage time incurred with a failure. Availability of spare transformers also greatly assists in scheduled replacement of aged transformers minimizing outage time.

- Monitor for trends of deteriorating condition of the transformer (decrease in Condition Indicator (CI)) and decrease in reliability (an increase in Equivalent Forced Outage Rate

(EFOR), a decrease in Effective Availability Factor (EAF). Adjust maintenance and capitalization programs to correct deficiencies.

1.3 Best Practice Cross-references

- I&C - Automation Best Practice
- Electrical – Generator Best Practice

2.0 Technology Design Summary

2.1 Material and Design Technology Evolution

Transformers have changed very little since their inception with regard to their functionality; however, considerable improvements have been made in component materials. The principal change is the efficiency and performance of modern core designs and improved windings and insulation materials. Modern transformers are smaller, have higher thermal limits and fewer losses than the older transformer fleet. Advancements in core materials, winding design and maintenance innovations have improved efficiency and reliability significantly.

Transformer efficiency is primarily determined by the original design criteria. Incremental efficiency improvements may be accomplished by system upgrades, but winding and core replacement are often not cost effective for very old transformers. Attempting to install a modern core or windings in an existing tank also limits design criteria. The transformers insulation condition, loading profile, historic ambient conditions, age, and known risks are among the top factors in an assessment to determine whether the MPT is a candidate for replacement or rehabilitation.

Analysis of operational history and test data may indicate that the CPL has significantly deviated from the IPL. Increased maintenance and operational constraints are also used to determine the CPL.

Many older transformers were more liberally designed and losses were not evaluated as critically as today. These losses can be significantly higher than those of a modern transformer. Losses associated with the MPT can be grouped into three major categories.

- Load losses
- No-load losses
- Auxiliary losses

The load losses are the largest of the three followed by the no-load losses. The auxiliary losses are comparatively quite small. For example, typical losses for a 36 year old MPT rated 161-13.2-kV, 58,500/78,000/87,300 kva, three phase, 55°C/65°C rise, ONAN/ONAF are:

Load losses	212.57 kW at rated current
No-load losses	56.07 kW at 100% rated voltage
Auxiliary losses	3 kW with all fans in operation

The load losses are associated with the windings and primarily consist of:

- I^2R loss associated with current
- Eddy current loss in the winding conductors

Advanced technology in winding conductor arrangements, transposition, and materials are used today in modern designs to reduce these losses. As the name implies, these losses are governed by the load current carried by the transformer and the resistance of the windings.

The no-load losses are associated with the core but independent of the load for the most part, and they are incurred whenever the transformer is energized. These losses are primarily the result of:

- Excitation current
- Hysteresis loss
- Eddy currents

The auxiliary losses are associated primarily with the cooling system and are incurred by the pump motors and fan motors and are usually negligible in comparison to load and no-load losses.

2.2 State of the Art Technology

More efficient material and manufacturing techniques have been developed over the years to reduce the no-load losses. Modern transformer designers can utilize various grades of steel for the core laminations. Fabrication techniques such as laser scribing were not available years ago. Improved core assembly and configuration processes are also utilized in modern transformers. Figure 2 shows an example of a modern core in a manufacturing facility. Figure 3 illustrates a 3-phase winding assembly before installation in the tank.

Figure 7: Modern Core during Manufacturing

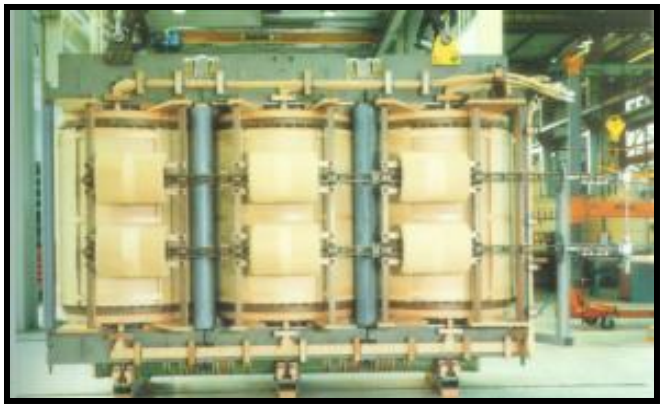

Figure 38: Three Phase Winding Assembly

Excitation current can be reduced by specifying limits on allowable flux density. One user recommends 1.7 Tesla maximum at the 110% of nominal voltage.

Sound pressure levels can be reduced with modern transformer design with reduced flux density and sound limits. Limits are set by NEMA based upon an equivalent two-winding transformer. Sources of noise are typically magnetostriction in the core and the cooling system equipment. By adding a requirement for new transformers to be 6 dB (A) less than the NEMA limits and using the above limit on magnetic flux levels, the sound pressure levels can be significantly reduced. These improvements will be appreciated by operations and maintenance personnel working in close proximity to the transformers and does not add appreciable cost to the initial price of the MPT.

Advancements in instrumentation and controls can now provide for more efficient and reliable monitoring of the transformer and associated systems. These include fiber optics for actual winding conductor temperature, bearing wear monitors for motor driven oil pumps, partial discharge probes, and on-line bushing monitors.

Replacement of aged MPT's with modern state of the art designs may result in significant reduction of losses as compared to those of 40-50 year old transformers. The cost savings should be considered for the life cycle of a new transformer and decisions should not be based solely on initial costs. Additionally, establishing partnering agreements with manufacturers and developing standardized designs can result in substantial cost savings in the purchase cost of replacement transformers and reduce inventory of spare parts.

3.0 Operations & Maintenance Practices

3.1 Condition Assessment

Once the MPT is properly assembled, oil filled, processed, and energized, its life cycle begins. A reliable life cycle is determined by how well the MPT is operated, maintained, and protected from faults. Reliability and loss prevention of the IPL and CPL are directly related to proper operation and maintenance of the MPT.

The ability to elicit good history lays the foundation for a good assessment. In order to provide for a representative condition assessment of the MPT, the first step is information gathering. Initial data includes: DGA, oil quality, factory tests, routine electrical tests, thermographic tests, operational history, maintenance history, and fault history. Component failure and replacement as well as any major upgrades or repairs is important information to review. Interviews with maintenance personnel can provide excellent information on current and past issues. Conduct a problem oriented evaluation based on existing and potential issues. Depending on the frequency of test cycles, it may be useful to review the last 15-20 years of test results and history. The quality of the data directly relates to the quality of the condition assessment. Trending and analysis of all data sources are performed to determine past experience and current health of the MTP.

DGA data is one of the most valuable diagnostics for determination of the internal health of the transformer. Overheating of the oil and cellulose, partial discharge, sparking/arcing, and decomposition of cellulose materials can be monitored, detected, and trended to reflect internal reactions occurring within the transformer. The rate of generation and magnitude of individual dissolved gases are both important factors to consider in analysis. The magnitude of concentrations can depend on age, operating history, and design.

The quality of the oil and its maintenance plays an important part in the life of the insulation system. Insulating oil degrades in time and the degradation by-products can have a considerable negative effect on the paper insulation as well as degradation of the papers dielectric performance level. Accelerated aging and loss of insulation strength can occur if the oil is not properly maintained. Periodic analysis of the oil quality tests data detects adverse conditions and allows for planned oil maintenance when required.

Various electrical tests can validate the integrity of the MPT. Insulation power factor tests can assist in determination of the winding insulation as well as that of the bushings. Winding resistance tests can detect problems in tap changer contacts, poor connections (bolted or brazed) and broken conductor strands within the windings. Analysis of electrical test data is an important tool to assist in determination of the transformers electrical integrity. Trending of the test results is invaluable in determining the degree and rate of degradation.

Thermographic inspections and analysis can provide a wealth of information ranging from low oil levels and overheating in bushings and connections to component malfunction such as poor heat transfer in radiators and coolers. A thorough review of thermal data provides yet another tool for condition assessment. Figure 4 is an example of a thermographic image detecting a bushing problem.

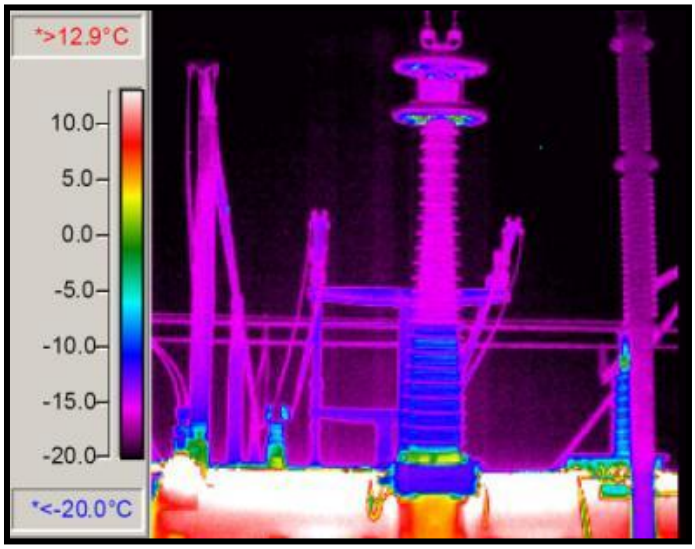

Figure 4: Thermographic Image Showing Low Oil Level in HV Bushing

The age of the transformer must be considered as it relates to the condition of the insulation system. In the presence of heat, moisture, and oxygen, all cellulose insulation systems will deteriorate. This degradation process is cumulative and cannot be reversed. The insulation strength will weaken until the system cannot adequately perform its intended electrical function. Even with excellent maintenance, these three entities can be minimized, but not entirely eliminated. Replacement of the entire insulation system for a 35-40 year old transformer is not economically feasible. Age plays an important factor in the condition assessment of MPT's.

After or during the data process, a physical inspection of the MPT is necessary in order to form a current impression of the equipment and discover any existing anomalies. Nameplate information can be obtained during the inspection. A systematic inspection process for the condition assessment should be performed to include the main tank, cooling system, bushings, oil preservation system, tap changer, controls, and protective/indicating devices.

Upon completion of the data assessment and physical inspection, a systematic and consistent approach should be used for each MPT. This allows prioritization to be assigned to each MPT for ranking purposes which assists in developing a plan for rehabilitation or replacement options assisting in both short term and long term strategic planning.

3.2 Operations

The MPTs operational parameters are governed by the original design criteria. Operation within these parameters provides the most efficient performance of the equipment and provides for optimum service life.

All transformers have thermal limits that must be strictly observed in order to maximize the life of the transformer. These temperature rise ratings are typically 55°C for standard cellulose insulation or 65°C for thermally upgraded cellulose. These temperature rise ratings are based on an average 30°C ambient over a 24 hour period. These ratings also determine the set points for the first and second stage cooling equipment if provided. Elevated operating temperatures above design ratings will cause excessive deterioration of the insulation system. For every 10°C increase in windings hot spot temperature above the design, the solid insulations reliable service life is cut in half. Thermal decomposition is cumulative and the life of the transformer is the life of the insulation system.

The MPT's apparent power capacity must equal or exceed that of the generator output within the prescribed power factor limits. This capacity is determined during design and any anticipated future uprates to the generator need to be considered when initially sizing the transformer. Sustained overloading can have significantly adverse consequences and cause damage to the windings, core, and insulation system. Overloading can also cause excessive temperature rise to occur in sealed bushings and lead to failure. The MPT should be operated within its design capacity in order to maximize the service life,

The maximum continuous operating voltage as governed by ANSI C84.1-1995 and IEEE C57.1200 is 105% continuous secondary voltage at rated MVA and at a power factor not less than 0.8. The system conditions may require tap changer adjustments higher than the system voltage for regulation purposes. The primary voltage must be carefully maintained by the generator so as not to over excite the primary winding. Over excitation will allow the excitation current to increase exponentially and core saturation can occur leading to damage to the transformer.

Modern surge arresters should be used to protect the transformer from close in faults. Metal oxide surge arresters provide better protection than the older thyrite type. A best practice is to have the arresters mounted as close to the bushing terminals as practical. Most modern designs now mount the arrester assembly to the transformer tank.

Plants should, as a good practice, carefully monitor the transformers operational data and insure that strict controls are in place to prevent operation of the MPT beyond its intended design.

Provisions for spare transformers greatly enhance unit availability by providing "insurance" when a failure occurs. Major repairs or replacement of an MPT can be a costly and lengthy process and on-site spare transformers can significantly improve the availability factor for the unit when a major event occurs.

Utilization of fixed fire protection and oil containment systems can also reduce collateral damage and minimize environmental issues during a major failure event and should be considered as a good practice.

3.3 Maintenance

Preventative and corrective maintenance are essential components of any MPT. The demand for timely maintenance becomes more critical as the transformer ages. Routine maintenance of the various transformer components is vital to the life of any power transformer regardless of its age. An

example of a typical maintenance issue would involve the inspection of the main tank. It should be inspected for oil leaks, rust, and effectiveness of the paint system. All gasketed flanges, mounting plates, bushing turrets, manhole covers, fittings, and valves should be inspected and oil leaks documented. Some oil leaks discovered may have severe consequences if not corrected. For instance, oil leakage on the intake side of a motor driven oil pump or flange can draw atmospheric air bubbles into the transformer. Bubble formation can be extremely detrimental to the electrical integrity of the transformer. Oil leaks should be corrected to address potential reliability and environmental concerns. Any unusual or excessive noise or vibration should be thoroughly investigated to determine source. Figure 5 illustrates one user's remedial measures to mitigate an oil pump leak. Such measures are not recommended as a long-term repair.

Figure 5: Excessive Oil Leak on Motor Driven Oil Pump

Cooling system effectiveness requires all components to be fully functional. This includes cleanliness of air space between radiators and coolers as well as surface area. Shut off valves should be verified to be in the proper position and secured in place. All fans should be in place and be fully operational. Repair or replace fans and fan blades as required. Motor driven oil pumps should be checked for vibration, excessive noise, and balanced phase currents. As the motor of the oil pumps is immersed in oil, excessive overheating of the motor can generate combustible gas which will enter the transformer. Defective bearings can allow the pump impeller to come in contact with the casing ring and discharge small particles of metal inside the transformer. The cooling system must be maintained in good working order to preserve the thermal limitations of the MPT.

The bushings are a vital part of the MPT and have a direct impact on reliability and availability. They are internally connected to the windings by various schemes such as bolted connections, draw leads,

and draw rods. Many high voltage bushings consist of an oil impregnated, multi-layer condenser wound on a central tube or rod. The condenser acts as a voltage divider and grades the line voltage to ground. Lower voltage bushings may be a condenser type or simply a fixed conductor through an insulator. Many older low voltage bushings used a compound or plastic filler within the insulator which may contain excessive levels of Poly Chlorinated Biphenols (PCBs) presenting environmental issues if a failure occurs. Routine tests, such as power factor, capacitance, hot collar, and thermographic inspections should be performed and all data referred back to the original nameplate data to identify potential risks. Trend results and replace bushings when out of tolerance limits are indicated. Inspections of bushings for poor connections, hot spots, proper oil levels, oil leaks, or insulator contamination/defects should be performed and documented. Bushings older than 30 years should be carefully monitored as they are at a higher risk for failure based on thermal aging. Low voltage bushings enclosed in housings are exposed to greater thermal stress. A single bushing failure can lead to a catastrophic transformer failure. Figure 6 clearly shows the damage caused from a single 500-kV bushing failure. This transformer was a total loss.

Figure 6 – Results of single 500-kV Bushing Failure

Figure 7 illustrates an example of an oil filled bushing, in this case contaminated with PCBs which can create environmental issues if a bushing failure occurs.

Figure 7: PCB Contaminated Bushings

The oil preservation system keeps external contaminates such as atmospheric air and moisture from entering the transformer. This protects both the liquid and solid insulation system. Oxidation of the oil is minimized and ingress of moisture is prevented. Preserving the oil quality is paramount to maximizing the life of the insulation system. A number of different type systems are used including sealed inert gas, inert gas constant positive pressure, free breathing, and sealed conservator. The function and operation of each type system used should be thoroughly understood in order to perform proper maintenance.

The two most common types of sealed tanks used on modern transformers in the U.S. are pressurized inert gas sealed and sealed conservator. The inert gas constant positive pressure sealed system (often referred to as nitrogen blanketed) maintains positive pressure of dry inert gas, usually nitrogen, above the oil. A nitrogen bottle and regulator system maintains a positive pressure of 0.5 to 5.0 PSI above the oil. The nitrogen used should meet ASTM D-1993 Type III with a -59°C dew point as specified in IEEE C-57.12.00. Regular inspection should be performed of the high pressure gauge, high/low pressure regulators, valves, pressure vacuum bleeder, and oil sump. Never allow the tank pressure to be zero or negative pressure. The sealed conservator system uses an expansion tank (conservator) which is mounted above the main tank and maintains the oil at atmospheric pressure. An air cell or diaphragm is placed inside the conservator which is vented through a dehydrating desiccant or maintenance free breather. As the oil in the main tank expands and contracts within the conservator, the transformer “breathes” to atmosphere via the breather. The air cell or diaphragm serves as a barrier and prevents any external air or other contaminates from coming into contact with the oil. The desiccant breather dries the air entering the conservator and the indicating desiccant gel should be inspected regularly and the desiccant replaced when approximately one-half of the material changes color. A maintenance free breather eliminates the need for desiccant replacement. The inspection port on top of the conservator should be removed every 5-6 years and the inside of the air cell or diaphragm inspected. If any oil is observed, a leak has developed, and the cell or diaphragm must be replaced. The quality of the insulating oil is highly dependent on proper maintenance of this system.

The quality of the insulating oil affects the health and life of the MPT. This highly processed mineral oil must be maintained or reduction in the dielectric strength and accelerated aging will be experienced by the insulation system. It is imperative that an aggressive oil testing program be in place for testing the chemical and electric characteristics of the oil. Standard tests and criteria are recommended and listed in IEEE C57.106. By performing trend analysis of the data, planned corrective action can by implemented before significant deterioration occurs. Many additional tests can be performed such as particle count, dissolved metals, oxidation inhibitor, corrosive sulfur, and furanic analysis to further refine the assessment of the oil and determine the maintenance techniques required. All mineral oils are organic compounds and will degrade over time. However, early detection of degradation allows for treatment of the oil in the field. Reconditioning of the oil will remove moisture, gases, and most particulates from the oil. Reclamation of the oil removes moisture, aging by-products, gases and particulates from the oil. Oil reclamation can return service aged oil to a pristine condition and may be both technically and economically a best practice for large MPTs. If additives for inhibited oil and passivators for corrosive sulfur mitigation are used, they are sacrificially consumed over time and must be replenished.

The controls, indicators, and protective devices are usually mounted on the main tank. The control cabinet contains power supply transfer components, breakers, relays, switches, controls and terminal blocks for the auxiliary equipment for the transformer. The cabinet should be provided with weather tight seals, filtered louvers for dust removal and air circulation, and a strip heater to prevent condensation. Routine inspections should be performed to check for corrosion, water leakage, and component function. Thermographic inspections should be performed to check for poor connections and overheating of wiring and components. Oil flow and oil level indicators should be checked for proper operation including alarm contacts. Pressure relief devices (PRD) are mounted on the transformer tank cover and are a last defense to attempt to mitigate a tank rupture under major fault conditions and should be routinely inspected. The piping system for the PRD should be arranged to direct vented materials from the PRD away from operations personnel, particularly in the control cabinet area. When replacing these devices, verify the correct pressure setting of the PRD required since various pressure settings are available. Top oil temperature indicators provide remote monitoring and alarms functions and should be regularly tested and calibrated. Winding (hot spot) temperature indicators simulate the calculated hottest spot within the windings. These indicators provide for monitoring, alarm/trip, and cooling system control functions. Older type hot spot indicators are basically a dial type remote thermometer which is monitoring a heated well. The heated well in the presence of the transformer oil when located at a height on the tank wall approximate to the design location of the winding hot spot, will simulate a corresponding winding hot spot temperature as a function of winding current. Modern electronic control monitors are available that can provide all functions of the dial types plus additional features for computation and trending the transformer temperatures. Fiber optics are also available for measuring actual winding conductor temperatures in lieu of simulated values. The IEEE and EPRI have developed computational algorithms which are able to calculate rather than simulate the winding hot spot.

Rapid pressure or sudden pressure relays are normally used on MPTs to provide for rapid tripping of the transformer in the event of an internal fault. Many utilities have installed redundant relays with

two out of three logic controls to eliminate single point tripping which greatly improves reliability and availability. All controls, indicators, and protective devices should be regularly inspected, tested, and calibrated as recommended by manufacturer's specifications.

An aggressive routine electrical test program should be implemented allowing maintenance decisions to be data driven. As a minimum, the test program should include the following tests: winding power factor, bushing power factor and capacitance, bushing hot collar, winding resistance, excitation, core ground insulation resistance (if external), and insulation resistance. Thermographic inspections should be included within the test program. All data analysis should be referred back to base line commission and/or factory and nameplate data. Additional advanced testing may be performed such as sweep frequency response analysis, acoustical and partial discharge tests when indicated.

The spare transformer(s) should be maintained in fully operational condition and should always be immediately available. Components should not be removed and used as spare parts for other MPT's. When the spare is needed, it is usually installed under tight time constraints. Routine testing and inspections should be performed in the same manner as an operating transformer. Adequate critical spare parts such as bushings should be immediately available.

4.0 Metrics, Monitoring and Analysis

4.1 Measures of Performance, Condition, and Reliability

The fundamental efficiency of a main power transformer and associated losses is described below.

Where:
- $\mathbf{T_L}$ is the total loss for the transformer (Watts)
- $\mathbf{N_L}$ is the no-load loss at rated voltage (Watts)
- $\mathbf{L_L}$ is the load loss at rated current (Watts)
- $\mathbf{A_L}$ is the sum of the auxiliary losses (Watts)
- $\mathbf{O_P}$ is the output of the transformer (Watts)
- **VA** is the rated capacity of the transformer (Volt-ampere)
- **PF** is the power factor of the secondary load

Total transformer losses are: $\mathbf{T_L = N_L + L_L + A_L}$

Transformer output is then expressed as: $\mathbf{O_P = VA * \%PF}$

Transformer efficiency is given by**:** $\mathbf{\%Efficiency = (O_P / (O_P + T_L)) * 100}$

The condition of the MPT can be assessed by the Condition Indicator (CI) as defined according to HAP Condition Assessment Manual.

Industry reliability and availability statistics can be monitored and compared to unit performance by use of the North American Electric Reliability Corporation's (NERC) performance indicators, such equivalent availability factor (EAF) and equivalent forced outage factor (EFOR). These are universally used by the power industry. Many utilities supply data to the Generating Availability Data System (GADS) maintained by NERC. This database of operating information is used for improving the performance of electric generating equipment. It can be used to support equipment reliability and availability analyses and decision-making by GADS data users.

Data Analysis of test data can be performed with the assistance and guidelines provided by various standards and guidelines related to specific analysis required. IEEE C57.104 and C57.106 standards provide information for testing and analysis of insulating oil. Various ASTM standards provide testing procedures and methodology. Several companies offer valuable electrical testing, oil analysis and investigation resources and provides assistance on interpretation and analysis techniques. Many vendor and reference materials are also available on all aspects of power transformers.

Determine the MPT's existing capabilities (CPL) and compare results to previous or original test data (IPL). Assess the efficiency, reliability, capacity needs, transformer energy losses, and revenue loss. Compare results to new MPT design data (from transformer manufacturer), and determine potential efficiency, capacity, annual energy loss savings, and revenue gain (PPL). For the latter, calculate the installation/rehabilitation cost and internal rate of return to determine major upgrade or replacement justification.

The condition assessment of the MPT is quantified through the CI as derived according to HAP Condition Assessment Manual. The overall CI is a composite of the CI derived from each component of the transformer. This methodology can be applied periodically to monitor existing transformers and can be monitored and analyzed over time to determine condition trends that can impact performance and reliability.

The reliability of a unit as judged by its availability to generate can be monitored through reliability indexes or performance indicators as derived according to NERC's Appendix F, Performance Indexes and Equations.

4.2 Integrate Improvements

The periodic field test results should be used to update the unit performance characteristics (CPL). These can be integrated into computer programs to provide on-line analysis results and anomalies to all involved personnel. Parameters can be established to trigger various maintenance or immediate action activities as required. Data trends allow predictive maintenance to be performed in lieu of reactive maintenance.

As the condition of the MPT changes over time, the CI and reliability indexes are trended and analyzed. Using this data, projects can be ranked and justified in the maintenance and capital programs to return the transformer to an acceptable condition and performance level or indicate the need for replacement for long term reliability and unit performance.

5.0 Information Sources:

Baseline Knowledge:

1. US Corps of Engineers, *Hydro Plant Risk Assessment Guide*, September 2006
2. USBR, FIST Volume 3-30, *Transformer Maintenance,* October 2000
3. *Transformers for the Electric Power Industry*, McGraw-Hill Book Company, 1959
4. *Transformer Maintenance Guide*, Transformer Maintenance Institute, 2001
5. EPRI, *Increased Efficiency of Hydroelectric Power*, EM 2407, June 1992
6. *Hydro Life Extension Modernization Guide, Volume 4-5 Auxiliary Mechanical and Electrical Systems,* EPRI, Palo Alto, CA: 2001. TR-112350V4.
7. EPRI, EL-2443, Vol. 1, *Basic Transformer Life Characteristics*

State of the Art

8. ABB, *Service Handbook for Power Transformers,* TRES – Transformer Remanufacturing and Engineering Services, North America, January 2006
9. CIGRE WG12, 18, *Report on Transformer Life Assessment,* 2003
10. ORNL, *HAP Condition Assessment Manual*
11. Doble Client Committee on Circuit-Breakers and Bushings, *Bushing Field Test Guide, Document BG661*
12. EPRI, *Transformer Aging as a Function of Temperature, Moisture, and Oxygen,* 1013931, 2007

Standards:

13. IEEE C57.104 – 2008, *Guide for Interpretation of Gases in Oil-Immersed Transformers*
14. IEEE C57.106 – 2006, *Guide for Acceptance and Maintenance of Insulating Oil in*
15. IEEE C57.12.00, *Standard General Requirements for Liquid Immersed Distribution, Power, and Regulating Transformers*
16. IEEE C57.12.10, *Standard Requirements for Liquid-Immersed Power Transformers*
17. IEEE C57.91, *Guide for Loading Mineral-Oil Immersed Transformers*
18. NEMA Standard TR 1
19. IEEE 637, *Guide for Reclamation of Insulating Oil and Criteria for Its Use*

It should be noted by the user that this document is intended only as a guide. Statements are of a general nature and therefore do not take into account special situations that can differ significantly from those discussed in this document.

Best Practice Catalog

Excitation System

Revision 2.0, 7/30/2012

1.0 Scope and Purpose

This best practice for the excitation system addresses its technology, condition assessment, operations and maintenance best practices with the objective to maximize performance and reliability. The primary purpose of the excitation system is to provide a regulated DC current to the generator rotor to induce and maintain a voltage in the stator at a set value under normal operating conditions while varying the generation or absorption of reactive power and supporting generator terminal voltage under fault conditions. The excitation system must respond to voltage and frequency excursions and this response must be coordinated with generator capabilities and protective relay functions to ensure continuous unit reliable generation. Due to its critical nature the reliability of the excitation system has come under the auspices of the North American Electric Reliability Corporation (NERC).

1.1 Hydropower Taxonomy Position

Hydro Power Facility → Powerhouse → Power Train Equipment → Exciter

1.1.1 Exciter Components

Exciters and excitation systems have evolved from DC generators driven by the shaft of the generator or by an AC motor to the present solid state systems utilizing diodes or rectifiers. Many of the original systems are still in service today as a testament to their simplicity and reliability. The solid state systems may be brushless systems where the rectification takes place on the rotating shaft and field current is supplied to the rotor without going through brushes and collector rings. A very basic system is seen in Figure 1. Performance and reliability related components of the excitation system include the low voltage controls, the source of the field current (dependent on the type of excitation system, i.e. rotating or static), the power source (for a static system), current interruption or isolation devices (AC or DC field breakers), and the brushes and collector rings/commutator. For purposes of this best practice, the excitation system is considered to “end” at the collector rings or at the point of connection to the rotating field circuit.

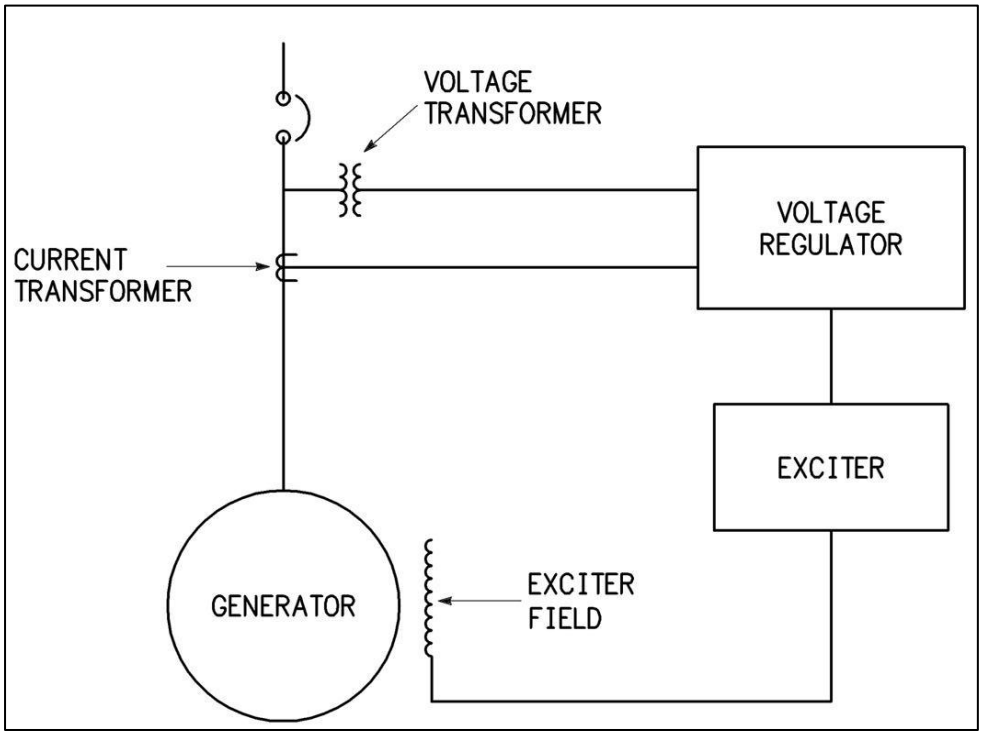

Figure 1: Excitation System Diagram

Low Voltage Controls: The low voltage controls portion, or regulators, of the excitation system provides the control and protective functions to regulate the DC field voltage and current supplied to the generator rotor. Field voltage to the generator is controlled by feedback from the generator instrument transformers. The information provided by these transformers is used by the "automatic voltage regulator" or AVR to control either the field of a DC exciter or alternator or the input to silicon controlled rectifiers (SCR's) which in turn determines the magnitude of the main DC field current. These instrument transformers are normally not provided with the excitation equipment however the voltage transformer is critical to operation of the AVR. Generally a "manual" regulator is also provided which functions as a field current regulator to maintain field current at a fixed value. In some critical facilities redundant regulators may be provided. On some older units a manual control rheostat is used that allows the AVR to be removed from service while the unit remains on-line under manual control.

Field Current Source: The primary field current sources will be either a rotating exciter feeding the main field of the generator or a static exciter using thyristor bridge rectifiers (SCR's). Another common excitation system is a brushless exciter with a rotating ac generator and rotating rectifiers

Power Source: For static exciters an AC power source must be provided for the bridge rectifier. This power source is generally a shunt supply transformer from the generator terminals but may also be any adequately sized AC supply from the line or load side of the generator breaker. For an exciter transformer, sometimes called a power potential transformer (PPT) or exciter power transformer (EPT), or any alternate supply, the rating must be sufficient to supply the field under all operating conditions, including faults on the generator terminals or the transmission system when connected, plus any losses in the conductors, convertor and transformer itself.

For rotating exciters the power source is usually a permanent magnet generator (PMG)

An alternative source of excitation power is a low voltage plant bus. This is not preferred due to the possibility of harmonic content from the exciter bridge having a deleterious effect on other equipment powered from the bus. This power source is not considered in this BP.

Current Interruption Devices: As the field current cannot change instantaneously for a close-in or internal generator fault fast suppression of the generator field is necessary to limit damage. As long as the unit is spinning and there is current in the rotor, energy will be fed to the fault. Depending on the type and vintage of the system a number of methods are utilized to dissipate and remove this energy. A field discharge resistor in parallel with the field winding provides a decay path for the field current when the resistor is placed in the circuit as the result of a unit electrical trip.

For a fully static system, the field voltage may be forced negative to result in rapid de-excitation.

For almost all systems field energy is dissipated in a field discharge resistor once the field breaker contacts open or a protective thyristor(s) is gated.

Collector Rings, Commutators, and Brushes: The brushes function to transfer field current from a stationary component, the brushes and rigging, to a rotating component. For a rotating exciter, the output of the exciter armature is delivered by the exciter commutator and brushes to the main generator field collector (or “slip”) rings and brushes

Non-performance but reliability related components of the excitation system include the instrument transformers used to measure generator voltage and current.

Instrument Transformers, Voltage and Current: As the generator terminal voltage and currents cannot be directly measured a means for reducing these values to useful levels for the regulator is required. These transformers are normally not part of the excitation system regulator “package”. Voltage transformers (VT’s) reduce the generator stator voltage and current transformers (CT’s) reduce the generator stator currents to useful quantities based on their transformation ratios. These transformers are normally housed in the generator switchgear and the secondary voltages and currents off any VT or CT may be used by multiple instruments, meters or relays. Inputs from the VT and CT are critical to both the controlling and protective functions of the regulator.

1.2 Summary of Best Practices

1.2.1 Performance/Efficiency & Capability - Oriented Best Practices

- Periodic performance testing to establish accurate current unit performance characteristics and limits.
- Dissemination of accurate unit performance characteristics to unit operators, local and remote control and decision support systems and other personnel and offices that influence unit operation and performance.
- Real-time monitoring and periodic analysis of unit performance at the Current Performance Level (CPL) to detect and mitigate deviations from expected performance for the Installed Performance Level (IPL) due to degradation or component failure.
- Periodic comparison of the CPL to the Potential Performance Level (PPL) to trigger feasibility studies of major upgrades.
- Maintain documentation of IPL and update when modification to equipment is made (e.g., re-insulation of field, exciter replacement).
- Trend loss of performance due to degradation of excitation system components. Such degradation may be indicated by increased excitation current required for a given load point or increased operating temperatures.
- Include industry acknowledged "up-to-date" choices for excitation system components and maintenance practices.

1.2.2 Reliability/Operations & Maintenance - Oriented Best Practices

- For any given load point the power into the exciter should be periodically measured and trended for degradation. For a static exciter the power into the exciter is from the PPT (or EPT). In a rotating system exciter field current and PMG output serve as indicators of power into the system. Shorts (shorted turns) or open or high resistance circuits in the components providing power to the exciter will result in increased losses and degraded performance.
- The power out of the exciter, i.e. the delivered field current, is determined by the AVR (or manual regulator). The amount of field current required for any operating point should be compared to the original manufacturer's curves.
- The brush rigging and collector commutator assemblies are most critical reliability components for both static and rotating exciters. The high temperature environment, brush dust generated, and wear of components due to relative rotating motion dictates increased focus on these areas. Brushes assemblies, collector rings and commutators should be inspected frequently. Establish a temperature profile for collector ring/commutator air temperatures. Trend for degradation and indication of brush/collector/commutator deficiencies. Periodic infrared inspection of brushes under load can provide an indication of brush selectivity issues. On higher speed units brush vibration (and attendant wear, chipping) may be caused by excessive collector ring runout.

- Monitor field insulation resistance to ground
- Establish normal operating temperatures for other system components and trend for degradation (e.g., PPT's, rectifier bridge).
- Electronic and electromechanical (low voltage control) components should be maintained in a clean and preferably temperature controlled environment.
- Manual and motor operated rheostats should be periodically "wiped" (run through their limits), checked for smooth operation and visually inspected for arcing or overheating. Drive mechanisms should be inspected and lubricated as required.
- AC and DC breakers should be checked per vendor's recommendations.

1.3 Best Practice Cross-references

- I&C – Automation Best Practice
- Electrical – Generator

2.0 Technology Design Summary

2.1 Material and Design Technology Evolution

Early exciters were usually a DC generator driven off of the main generator shaft, by an AC motor or even an auxiliary water wheel. With the development of solid state devices, rectifier sourced exciters were developed evolving into the fully inverting silicon controlled rectifier (SCR) bridge(s) used in today's solid state exciters. Voltage regulators have changed from manual control of a rheostat in the field circuit of a DC generator to the present solid state digital regulators. The regulator will control either the field of a DC exciter or alternator or it may control the gating of the SCR's in a solid state exciter.

Performance levels for excitation systems can be stated at three levels as follows:

The installed performance level (IPL) is described by the unit performance characteristics at the time of commissioning. For excitation systems these performance levels are defined by the manufacturers provided guaranteed loss data and by the unit saturation (Figure 2) and "V" curves (Figure 3) which define the expected field current requirements for a given load condition. An explanation for the interpretation of these curves is found in IEEE 492.

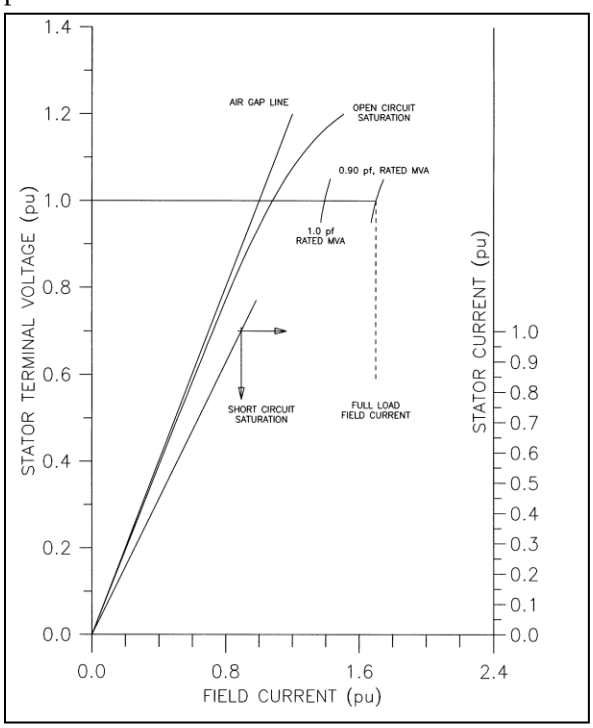

Figure 2: Typical Saturation

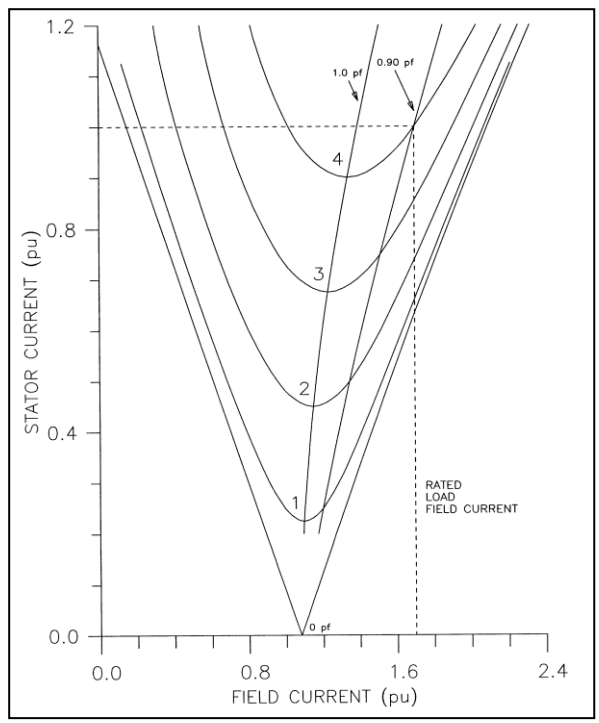

Figure 3: Typical "V" Curves

The Current Performance Level (CPL) is described by an accurate set of excitation system performance parameters. While current performance can be compared to the IPL curves and loss

data, additional data points (not provided for by the IPL) for temperature measurement of system components should at some point be collected for baseline and trended over time.
Determination of the Potential Performance Level (PPL) for excitation system will entail system improvements that provide minimal reduction of losses and non-performance related improvements such as improved response times offered by solid state systems. For a given generator, rating improvements in excitation performance can only be expected to restore the original IPL relative to field current required at a particular load point.

2.2 State of the Art Technology

Excitation system efficiencies, as a measure of losses, are the sum of the electrical and mechanical losses in the equipment supplying excitation. This will include losses in exciter field circuits, manual and motor operated rheostats, voltage regulators, PPT's, collector and commutator assemblies, motors used in the system, switchgear and any electrical connections in the power circuit. These losses are directly correlated and vary based on the amount of field current which is directly correlated to the operating power factor and load.
For a state of the art excitation system with a fully static exciter and digital voltage regulator the total excitation losses may approach 4% of the total generator losses at rated load condition. For a 33 MVA unit this total may be 15 to 30 kW. In older systems which include manual and/or motor operated rheostats, main exciter field windings, a pilot exciter and commutators not found in a state of the art system these losses may approach 10%. Here the value may be 40 to 60 kW. In both cases these IPL values are generally provided as calculated data by the manufacturer and very difficult to determine empirically as independent test for the exciter.
The more significant gains as defined by the PPL are in the area of reliability, improved exciter response time (transmission system stability, minimized fault damage), reduced maintenance requirements and improved flexibility and integration with modern control and protection systems. Reduction of losses is not a prime consideration in the decision to replace an existing system.

3.0 Operation & Maintenance Practices

3.1 Condition Assessment

USACE Hydro Plant Risk Assessment Guide [1] provides a methodology for assessing the condition of a system based on its age, operation and maintenance history, availability of spare parts and service support, and test performed on both the power and control circuitry. Some of the factors considered in this assessment follow.

The NEMA insulation class (B, F, H, etc.) will determine the operating temperature limits. The electrical insulation integrity of this insulation and the system is reduced with increasing age. All electrical insulation deteriorates over time due to increased exposures to the cumulative effects of thermal stress and cycling, vibration and mechanical damage, and deleterious contaminates. Age also determines obsolescence status and availability of vendor technical support and spare parts. A variety of electrical tests may be performed to aid in assessing insulation condition.
Obviously, these condition assessment factors are closely related. The evaluation should also consider the failure and forced outage history. It is likely, however, particularly for older units, that there may be a lack of history, maintenance records, and design documentation to supplement the assessment. Infrared thermography can be used to monitor deterioration of bolted electrical power connections, collector/commutator performance and rheostat performance. Winding resistance and system insulation resistance should be measured periodically to detect deterioration. Field insulation resistance may be continuously monitored online and trended.

Brushless systems should be inspected stroboscopically for blown fuses if applicable. In some cases a blown fuse can cause a cascading overload of remaining fuses. Collector ring/commutator and brush rigging condition should be evaluated. Ring film condition, commutator condition and overall cleanliness have a significant effect on reliability. A typical collector ring, brush rigging assembly, commutator assembly is seen in Figure 4.

Bridge temperature, transformer temperatures, cabinet air temperatures and collector ring temperatures can provide an early indication of deterioration. Figure 5 shows a typical solid state system cabinet.

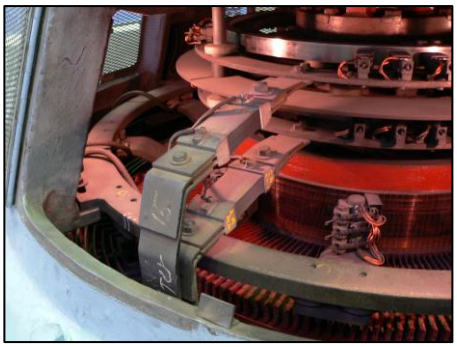

Figure 4: Collector/Commutator/Brushes

Figure 5: Typical Solid State Cabinets

3.2 Operations

It is critical that the design and capacity of the exciter match the operational requirements. Operation of the exciter and generator must be maintained with the manufacturer's capability curve. An example capability curve can be seen in Figure 6. For the excitation system critical operation is in the over excited region of the curve where field current is a maximum and temperature limits may be reached. Operation outside these limits results in increased heating and rapid deterioration of insulation and reduction of service life. Temperature limits for the field are determined by the NEMA insulation class.

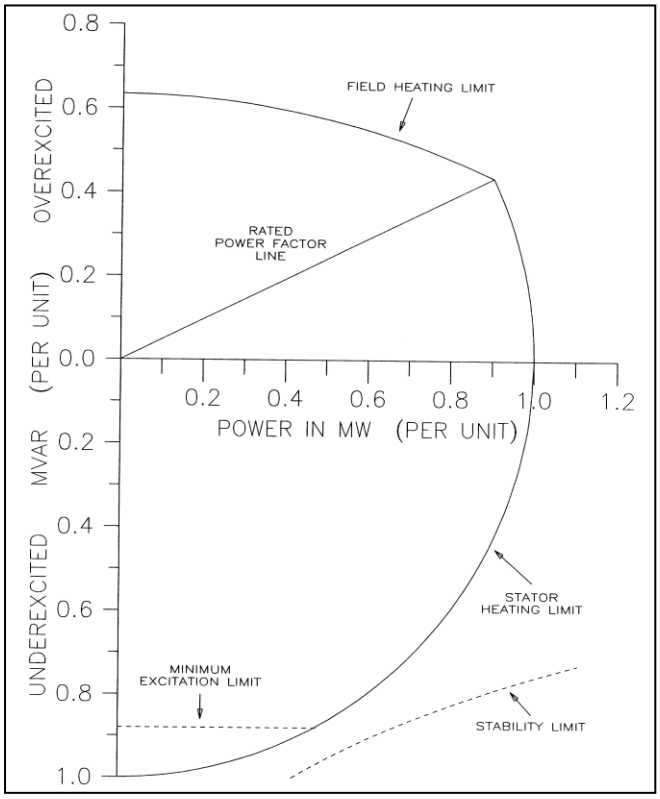

Figure 6: Typical Generator Capability Curve

For generating units whose capacity (output) has been uprated without exciter replacement consideration should be given to the number of collector ring brushes required by increased field current, the change in the generator short circuit ratio if applicable, and operating temperature limits.

Shorted rotor turns may increase excitation requirement for a given generator load, kVA. Rotor insulation class may limit kVA output due to temperature limits. Deratings of the excitation system may also impact kVA output of the unit.

3.3 Maintenance

The frequency of maintenance will best be determined by consideration of manufacturer's recommendations, the age of the unit, the operating mode of the unit, environmental conditions and the failure history of the unit. No one frequency recommendation will be applicable to all units. The

maintenance of excitation system components is also a significant factor in its performance capabilities. Manufacturer's recommendations provide a basis for items necessary to maintain. These recommendations should be adjusted based on the actual age, operating conditions and operating environment in order to maximize life expectancy. Cleanliness is required to minimize potential for electrical tracking and grounds as well as to prevent degraded cooling or heat transfer.

The collector ring/commutator and brush rigging assembly are probably the most maintenance sensitive component of the system when it comes to reliability. The generation of carbon brush dust due to the relative motion between the rings/commutator and the brushes provides opportunities for field grounds and flashovers, including fires. Brush condition (length, freedom of movement, leads discoloration) should be visually checked frequently depending on how the unit is operated. The collector ring film should be visually inspected and run-out measured to be within manufacturer's tolerance. If necessary the ring may be required to be trued, in situ or removed. The ring film may need to be removed and re-established. In either case the ring finish should be within manufacturer's tolerance. If necessary as indicated by insulation resistance measurements the brush rigging should be cleaned.

Inspect the commutator and ensure that the commutator insulation does not protrude above the copper bars. If so, undercut per manufacturers recommendations.

Rheostats should be inspected, cleaned to ensure uniform, low contact resistance and lubricated for free movement. A typical rheostat is seen in Figure 7.

Figure 7: Motor Operated Rheostat

Excitation system AC and DC breakers and contactors should be tested, inspected, and maintained per the manufacturer's recommendation. Particular attention should be given to DC breaker and contactor contacts for wear and electrical erosion.

Equipment enclosures should be cleaned and any vent filters replaced as necessary. Vents should not be obstructed. For solid state systems with force cooled bridges verify operation of bridge fans, lubricate as required.

Both solid state dry type and oil filled PPT/EPT's should periodically meggered and have turns ratio tested. If fitted with fans they should be cleaned and operation tested. Oil filled PPT/EPT's should be inspected for tank and bushing leaks. Transformer bushings, if applicable, should be cleaned and oil level checked. If fitted with oil pumps and motors their operation should be tested. Transformer oil should be checked for dissolved gases and quality.

4.0 Metrics, Monitoring and Analysis

4.1 Measures of Performance, Condition, and Reliability

Excitation system losses (rheostat, brushes, transformers) and excitation system availability are all measures of condition and reliability. Losses associated with the exciter may include rheostat losses, brush contact losses, brush friction losses, and windage losses. These losses may approach 15-30% of the unit full load losses. Generator rotor I^2R losses are included with the generator and not considered in the excitation best practice.

Any I^2R loss, which is a waste heat loss, may be reduced by reducing R. "R" is the resistance which is a function of temperature and physical properties of copper in the excitation system components. R varies but not significantly with the temperature changes in operation. "I", the current, may vary significantly. The amount of current, the most significant factor in the loss equation is dictated by the load. Exciter losses are the total of the losses in the equipment supplying excitation. This equipment is minimized with a static system, thereby reducing these losses.

Rheostat losses are the I^2R losses of the rheostat if used. This is eliminated when using a static system.

Brush contact losses are the electrical losses in the collector ring brushes. Prudent maintenance of collector ring, commutator (eliminated with static system) and brush rigging minimizes these losses.

Brush friction loss is a mechanical loss due to rubbing friction between the brushes and collector rings and/or commutators. Elimination of the commutator brushes with a static system reduces these losses.

Friction and windage losses are the power required to drive an unexcited machine at rated speed with the brushes in contact (excitation system contribution to this loss is typically minimal and unavoidable).

The key measurements include field current I_f, field winding resistance R, temperature T, and brush voltage drop in volts.

4.2 Data Analysis

The CPL, relative to losses, is described by an accurate set of unit performance characteristics determined by unit efficiency testing, which requires testing per IEEE 115 methods. The CPL relative to field current requirements of the unit is made by comparison to the saturation and "V" curves. Failure to meet the IPL for field current may be due to shorted rotor turns.

4.3 Integrated Improvements

Reliability issues, obsolence issues or impending unit uprate may warrant complete replacement of the existing exciter. The preferred option is a completely solid state unit which offers the following advantages [4]:

- Eliminates high maintenance and obsolete components
- Eliminates time constants associated with exciter field components and provides fast system voltage recovery and transient stability
- Provides data recording capability for trending and troubleshooting

- Offers an opportunity to increase original field excitation and uprate the unit.
- Provides digital communication capability that facilitates remote control and monitoring.
- Provides option of backup regulators
- Enhanced control features such as a power systems stabilizer, power factor and VAR control.
- Eliminates losses associated with commutator brushes and rheostats
- Facilitates validation of system dynamic performance for conformance with NERC standards.

It may not be necessary to replace the rotating exciter to restore unit reliability. Replacement of the pilot exciter/voltage regulator with a digital system may be sufficient to improve unit reliability; however, the response time of the system will not be optimized as with a full static system. While replacement of the voltage regulator only is a reasonable compromise, replacement with a full static excitation system is the best solution.

NEMA class F or H insulation (maximum operating temperature 155 or 180 C, respectively) should be used for rotor pole windings. For unit uprates brush capacity should be evaluated for additional field current requirements. Constant pressure brush springs should be used for collector and commutator brushes.

Location and placement of a new solid state system and PPT (EPT) is often a challenge in existing plants. Once locations for new equipment have been determined, consideration of the operating environment may indicate the need for additional cooling for reliability of the low voltage electronics.

5.0 Information Sources

Baseline Knowledge:

1. USACE – *Hydro Plant Risk Assessment Guide, Appendix E4 Excitation System Condition Assessment*
2. EPRI –EL-5036, Volume 16, *Handbook to Assess the Insulation Condition of Large Rotating Machines*
3. IEEE 115 – *Guide for Test Procedures for Synchronous Machines*

State of the Art:

4. Basler Application Notes – *16 Reasons to Replace Rotating Exciters with Digital Static Exciters*
5. EPRI 1004556 – *Tools to Optimize Maintenance of Generator Excitation Systems, Voltage Regulators and Field Ground Detection*

Standards:

6. IEEE Std 492 – *Guide for Operation and Maintenance of Hydro-Generators*
7. NERC GADS – *Top 25 System/Component Cause Codes*
8. IEEE Std 421.1 – *Standard Definitions for Excitation Systems for Synchronous Machines*
9. IEEE Std 421.2 – *Guide for Identification, Testing and Evaluation of the Dynamic Performance of Excitation Control Systems*
10. IEEE Std 421.3 – *Standard for High Potential Test Requirements for Excitation Systems for Synchronous Machines*
11. IEEE Std 421.4 – *Guide for the Preparation of Excitation System Specifications*
12. IEEE Std 421.5 - *Recommended Practice for Excitation System Models for Power System Stability Studies*
13. IEEE Std 1147 – *Guide for the Rehabilitation of Hydro Electric Power Plants*
14. EPRI Report 1011675 – *Main Generator Excitation System Upgrade/Retrofit, Nov 2005*

It should be noted by the user that this document is intended only as a guide. Statements are of a general nature and therefore do not take into account special situations that can differ significantly from those discussed in this document.

Best Practice Catalog

Generator Switchgear

Revision 2.0, 8/23/2012

1.0 Scope and Purpose

The document for the generator switchgear addresses its technology, condition assessment, operations, and maintenance best practices with the objective to maximize the unit performance and reliability. This best practice is limited to medium voltage (MV) generator breakers and associated switchgear when connected between the main generator terminals and the low voltage generator step-up (GSU) windings. Unit connected generators utilizing high voltage (HV) breakers are not included.

The primary purpose of the generator switchgear is to provide load switching (synchronizing the generator to the system) and fault interrupting capabilities. The switchgear includes the switching or interrupting device (breaker) and associated enclosure, buswork, control, and instrumentation. The switchgear may also include metering and protective devices.

The manner in which the generator switchgear is designed, operated, and maintained can significantly impact the reliability of a hydropower unit.

1.1 Hydropower Taxonomy Position

Hydropower Facility → Powerhouse → Power Train Equipment → Generator Switchgear

1.1.1 Generator Switchgear Components

Switchgear is a general term that in this application refers to the interrupting devices that control and protect the flow of the generator output power. These devices include the circuit breaker and may include instrument transformers, control devices, and surge protection. The circuit breaker, depending on the type and vintage, may be freestanding or installed in metal clad switchgear which has the following characteristics as defined by ANSI [11]:

- Switching and interrupting devices are removable
- Energized parts are compartmentalized
- Compartments are isolated from each other
- Medium voltage bus is insulated
- Accessible from front and rear
- Shutters isolating the breaker compartment from the live bus when the breaker is withdrawn are required

Figure 1: Typical Switchgear

Figure 1 shows a typical indoor switchgear line-up with the breaker removed from its compartment.

Arc resistant switchgear, designed to withstand the effects of an internal arcing fault, has been developed and is offered by some manufacturers.

Breaker: The primary component of medium voltage switchgear is the circuit breaker. The main function of the breaker is to either connect or disconnect the generator to the system through the GSU or to interrupt generator or system sourced fault currents. The breaker may be an oil, air-magnetic/air blast, vacuum, or Sulphur Hexaflouride (SF_6) type depending on the arc interrupting medium and technology.

Oil circuit breakers were among the first breakers implemented and are primarily used in outdoor applications. Although they were discontinued in generator breaker applications starting in the 1940's, they may still be found in older hydro plants. Oil circuit breakers have contacts located in an oil tank with an operating mechanism usually located outside the tank.

Air-magnetic or air blast breakers utilize a combination of one or more of the following techniques for fault interruption: 1) high pressure air blast, 2) arc elongation, 3) arc constriction, 4) arc restraining metal barriers, or 5) magnetic blowout. These techniques are used to extinguish the arc resulting when the contacts separate (breaker opens). These breakers are spring operated and usually installed in metal clad switchgear. They are completely removable for maintenance, testing and inspection. Rack out breakers may connect either vertically or horizontally with the main bus.

Vacuum breakers employ contacts in a vacuum bottle with a near perfect vacuum to interrupt current flow. The contact geometry can vary, based on the application, to reduce contact wear, improve arc interruption at zero current, and to reduce pre-strike and restrike occurrences. The current carrying contacts are not accessible on these breakers. Figure 2 shows one phase of a medium voltage sealed vacuum interrupter.

Figure 2: Vacuum Circuit Breaker Interrupter

SF_6 utilizes design concepts similar to vacuum circuit breakers except the contacts are inside a bottle filled with sulphur hexafluoride for arc extinguishing. Modern SF_6 switchgear typically houses the bus and circuit breaker in the SF_6 medium resulting in a compact and arc resistant assembly. SF_6 breakers may be freestanding or installed in metal clad switchgear.

In 1989 the IEEE [6 and 7] first developed a standard recognizing the significant differences between standard distribution class breakers and true generator breakers. The purpose of the document was to set standards required by the severe operating conditions for generator circuit breakers. The current interruption basis of an ordinary distribution short circuit type breaker is that for relatively short time increments the symmetrical short circuit current has a constant value with a direct current (DC) offset determined by circuit conditions at the time of the fault. This DC component, or offset, has a rate of decay determined by the system reactance (X) to resistance (R) ratio (X/R). Both IEEE and ANSI define this ratio as 17 for distribution applications with a time constant of 45 ms; whereas, in a generator application the ratio is much higher due to the generator and transformer reactance. Ratios of 50 or more with a time constant of 133 ms are common for generators. This means that the DC component of current in a generator application at the instant of interruption is much larger than it would be in a distribution application. Another significant difference is the potential for a transient recovery voltage (TRV) across the interrupter contacts. In a generator application, this is 3 to 4 times higher than it would be in a distribution class breaker. Also, as a generator is brought to frequency and voltage in preparation to synchronize, there are instants when the voltage across the open breaker contacts can theoretically be 180 degrees out of phase.

Instrument Transformers: These transformers are typically included with the generator switchgear or installed on the generator bus external to the gear. They reduce the medium voltage and high currents to low values usable for metering, relaying, and regulating circuits. Voltage is transformed or “stepped-down” by the potential (PT) or voltage (VT) transformer. The primary winding is usually connected line-to-line or line-to-neutral and is isolated from the secondary control circuits which are normally 120 VAC. The PT’s

should be a drawout-type with current limiting fuses on the primary. The current transformer (CT) is often a toroid (doughnut) type where the primary winding, or generator lead, passes through the center or it may be a busbar type where a section of the generator bus forms the primary winding. CT ratios should be selected to coordinate with their associated protective devices and should be adequate for steady state normal load currents as well as fault currents. The CT should have a mechanical rating equal to the momentary rating of the switchgear and be insulated for the full voltage rating. Both PT and CT accuracy / burden selection should be based upon the application and loads served (relaying and/or metering).

Surge Protection: Capacitors, surge arrestors, or both may be included to protect the insulation of the generator. The best practice is to install surge protection at the generator terminals although it is common that these devices be included in the switchgear or be installed on the external bus. Outside units or units with outside bus arrangements should be provided with surge protection designed to maintain voltage surges below the insulation level of the protected equipment.

Auxiliary Cooling: Supplemental cooling may be included to achieve the required ratings while maintaining prescribed temperature limits.

Buswork: Aluminum or copper busbars (or cable) may be used to connect the line and load sides of the breaker. In metal clad switchgear this bus will be insulated. Buswork and cables must be rated for the voltage, continuous, and momentary ratings of the breaker.

1.2 Summary of Best Practices

1.2.1 Performance/Efficiency & Capability – Oriented Best Practices

- Periodic verification of torque for bolted bus connections.

1.2.2 Reliability/Operations & Maintenance Oriented Best Practices

- Circuit breakers need periodic exercise. If the breaker remains open or closed for 2 months or more, it should be opened and closed several times to verify smooth operation.
- Instrument transformer accuracy and burden ratings shall be adequate for the relaying and/or metering loads they serve.
- Inspect circuit breakers after severe fault interruptions
- All openings should be sealed against weather or vermin intrusion.
- Breakers should have trip circuit monitoring and either redundant trip coils or a breaker failure scheme to trip upstream breakers depending on the plant configuration.

- Verify circuit breaker ratings are adequate for updated capacities and fault.
- Remote racking devices should be provided and utilized as a safety feature for operations and maintenance personnel.

1.3 Best Practice Cross-references

Electrical – Generator Best Practices

2.0 Technology Design Summary

2.1 Material and Design Technology Evolution

Original applications have been dominated by oil and air interrupting technologies. The primary disadvantages of these technologies are that they are both bulky and require high maintenance. The disadvantages and requirements for higher ratings led to the later development of first SF_6 and then vacuum technologies. Each interrupting technology described above has followed its own time-line as manufacturers continued to refine the product for higher capacity, reliability and reduced physical size. Air and oil technologies have been replaced by vacuum and SF_6 over a 40 year period starting in the early 1970's.

In the oil-type circuit breaker, the interrupter is immersed in insulating oil as the arc quenching medium. This was a dominate circuit breaker type until the 1960's. In this design, contacts are configured and timed so that the pressure generated by the arc at the initial separation point forces oil through a secondary contact to both cool and extinguish the arc. Although there are variations on the design of oil circuit breakers, all use this principal for fault interruption. Flammability, environmental, and high maintenance factors are some disadvantages of the oil circuit breaker.

Early air circuit breakers were simply plain break switches which stretched the arc between a set of stationary and movable contacts with no arc control. Consequently, arc times were long, contact wear was high, and ratings were limited. Performance was improved by the inclusion of arc control devices with the arc chute being the most common device. Air blast or air magnetic type circuit breakers use air as the dielectric and arc quenching medium. While simplicity of design, ease of inspection, and relatively low initial cost are advantages of the air-type; and high maintenance and use of air as an insulating and extinguishing medium are disadvantages. Another disadvantage of both air and oil type breakers is that as these types have been supplanted by the SF_6 and vacuum technologies, locating replacement parts and servicing has become difficult.

SF_6 breakers were first used in the United States in the early 1950's. Puffer-type, where the relative movement of a piston and cylinder is used to generate a compressed gas for arc extinction, was introduced in 1957. Since that time, developments in SF_6 breaker technology have made them more robust, quieter, and more reliable than some of the other technologies. As the contacts in the puffer-type (single pressure) SF_6 breaker separate, the difference in pressure between the hot gas (caused by the arc) and the cool gas causes a flow that cools the breaker pole and sweeps the arc from the contacts. In earlier SF_6 breakers, a blast of high pressure gas from a pressurized tank was used to extinguish the arc. While SF_6 itself is non-toxic, the by-products created by arc interruption are considered toxic. Also, SF_6 has been identified as a green house gas and therefore potentially an environmental concern.

Vacuum interrupters became available in the early 1970's. An advantage of the vacuum interrupter technology is that the arc is maintained at a minimum since there is nothing in the extinguishing medium (except contact material) to ionize and the vacuum itself is a superior

dielectric. Contact erosion is minimal. Vacuum circuit breakers have lower mechanical requirements due to their smaller size and shorter stroke and are simpler in design than the other technologies.

2.2 State of the Art Technology

As previously mentioned, SF_6 and vacuum technologies are now preferred for their many advantages over oil and air type circuit breakers. Manufacturers continue to make improvements to both SF_6 and vacuum breakers.

An increased interest in personnel safety has lead to the recognition of arc flash hazards associated with medium voltage switchgear by OSHA, NFPA and IEEE. Each of these organizations has addressed the concerns by developing standards governing arc flash hazards [13, 14, 15, and 16]. IEEE defines accessibility types of arc resistant gear with Type 1 and Type 1C having arc resistant features at the freely accessible front of the equipment and Type 2 and 2C include these features on all sides. The "C" indicates the inclusion of arc resistant features between adjacent compartments. Arc resistant switchgear includes more robust construction to contain the fault energy, special venting to also contain the fault energy and channel the exhaust gas, and closed door circuit breaker racking and operation features. Venting of the exhaust (arc energy) should be such that it will not present a personnel hazard or jeopardize other equipment. While arc resistant switchgear may certainly play a role in providing a safer employee workplace and represents a "state of the art technology" when applied in conjunction with proper training, job planning and tools, it is currently not a requirement of any governing authority.

As previously mentioned IEEE standards [6 and 7] now recognize the distinction between distribution class and generator class circuit breakers. In practice, a "generator" circuit breaker must be able to withstand phase displacements prior to synchronizing and following trips, withstand transient recovery voltages not seen on normal distribution systems, break strong and highly asymmetrical fault currents (delayed current zeroes), and withstand continually high load currents.

3.0 Operation & Maintenance Practices

3.1 Condition Assessment

In addition to the visual inspections and tests performed as routine maintenance, a number of other factors are considered to assess the breakers. The assessment should consider the age, number of operations, history, and type of environment. The United States Army Corps of Engineers (USACE) [3] provides a very detailed, multi-tiered approach to the assessment of generator circuit breakers. While this assessment considers technological factors in the scoring, overall assessment and scoring contained herein provides a methodology to use when the detailed information required by the USACE guide may not be available.

Electrical testing constitutes one facet of the condition assessment. Testing should be performed per the manufacturer's guidelines regarding method. Frequency of testing will be determined by the manufacturer's recommendations and operating experience. For example, depending on the severity of the fault, breakers should be considered for inspection following fault interrupting duty. Breakers that are cycled multiple times during a 24 hour period should have operating mechanism inspections more frequently than those operated on a weekly basis. For the electrical test, manufacturers will provide specifications for insulation resistance (rule of thumb is 1 megohm per kV + 1 megohm), contact resistance, and timing. Hi-potential testing confirms suitability for operation at rated voltages and can be used to ensure vacuum interrupter bottles have maintained their vacuum. Breaker control checks should include verification of trip and close at minimum control voltage.

The condition assessment should evaluate the breaker's interrupting current rating against the maximum available fault current. As originally supplied, the breaker most likely had extra capacity to allow for system growth. Changes in system conditions, generator step-up transformer impedances, or unit capacity may have increased available fault current to a point that may exceed the breakers rating. If the current available fault current exceeds the breakers capacity, failure of the breaker and excessive collateral damage is possible. In this case, corrective action to increase the breakers capacity or decrease available fault current is required.

3.2 Maintenance

Maintenance requirements are largely influenced by the service duty, complexity of design and operating environment. Because of wide variations in these factors, each operator should develop maintenance schedules based on operating experience and the manufacturer's recommendations. Maintenance recommendations for each type of breaker will vary due to design details and manufacturer. Basic maintenance should include the following:

- Check the operating mechanisms of all types of breakers for freedom of movement, wear, and proper lubrication as recommended by the vendor.
- Racking devices, if applicable, should be checked for wear and freedom of movement.
- Check auxiliary position switches (MOC and TOC) for actuation and continuity.

- Check electrical sliding and pressure-type contact points for continuity.
- Perform visual inspection of switchgear components for obvious defects.
- Ensure all electrical connections are tight. Perform infrared scans, if possible, of bolted and plug in connections.
- As with all electrical devices for all types of breakers, cleanliness is essential.
- Both indoor and outdoor switchgear and breakers should have physical barriers (screens, filters, etc.) to prevent intrusion by vermin and environmental contaminates.
- Thermostatic controls should be verified for function.

Oil circuit breakers are unique in that the interrupting medium, oil, is subject to deterioration every time the breaker operates with load; therefore, requiring periodic quality testing and refurbishment or replacement. Main and arcing contacts require inspection and are subject to more wear than either SF_6 or vacuum breaker contacts. Since their contacts are immersed in oil, they are not visually accessible during routine maintenance. Contact engagement may be determined by measuring the travel of the operating mechanism. In addition to the aforementioned, inspection for leaks is required. These breakers are usually freestanding (i.e. not metal enclosed or metal clad).

Air magnetic and air blast breakers are both air insulated. Air blast breakers use high pressure air to operate the breaker and extinguish the arc and may not be removable for maintenance. For both air insulated breakers, the main and arcing contacts require periodic inspection. All components of the operating mechanism should also be checked for proper operation, lubrication, excessive wear, and missing or broken hardware. The pressurized air system of the air blast breaker should be inspected and tested per the manufacturer's recommendations and as a minimum any leaks should be identified and repaired.

Vacuum breakers typically require less maintenance than the other types. As with SF_6, the interrupters are sealed so no contact cleaning is necessary (or required) since the arc is interrupted in a vacuum. Normally the operating rod is scribed with a mark whose position with the contacts closed is noted and compared to a reference. These breakers usually have fewer operating parts and operate at lower forces than the other types, and are therefore likely the most reliable. Some manufacturers consider their vacuum breakers to be maintenance free during an operational life of 10,000 switching operations.SF_6 load contacts will not normally be accessible but contact engagement may be determined by travel of the operating mechanism. Practical experience with SF_6 has shown that sealed interrupters may not require servicing and are typically suitable for as many as 50 short circuits (depending on severity) and several thousand full load interruptions before replacement is required. Continuous cast epoxy envelopes and special seals have almost eliminated any maintenance requirements for the interrupters. It should be noted that high temperature decomposition of SF_6 gas leads to the generation of toxic byproducts. If powdery substances are encountered during maintenance of SF_6 breakers or interrupters, they should not be inhaled or handled.

4.0 Metrics, Monitoring and Analysis

4.1 Data Analysis

Reliability data to analyze includes all electrical test data collected and comparisons to the manufacturer's specification. If performed regularly, the data can be trended, especially contact resistance and contact open/close timing tests.

A comparison of available short circuit current with the breakers interrupting capability should be made. To accomplish this, an up-to-date short circuit study must be available and the circuit breaker interrupting rating known. The circuit breaker rating methods have evolved from rating the breaker on a "total" current basis to a symmetrical current basis for newer breakers. "Total' current included the DC offset of the AC symmetrical current. The standards using this rating basis have been superseded although there are probably still breakers in service that carry these ratings. Newer standards consider the rated short circuit current as the highest value of the symmetrical component of the short circuit RMS of the current envelope. In the event a breaker rated on a total current basis is replaced, a conversion to the rated symmetrical current basis is performed as follows:

Note: This conversion should be approved by the prospective supplier.

Rating based on symmetrical current = Total current rating x [nominal voltage/rated maximum voltage] x F

F = 0.915 for a 3 cycle breaker

= 0.955 for a 5 cycle breaker

= 1.0 for an 8 cycle breaker

4.2 Integrated Improvements

Vacuum and SF_6 type circuit breakers offer numerous advantages over air and oil type circuit breakers. These technologies offer smaller size, higher reliability, and reduced maintenance cost. The most critical improvement is to ensure that the capacity of any breaker should offer some margin over the expected worst case fault current. Any changes to the power system made since the installed breaker was specified may challenge its interrupting capacity and should be analyzed. The required capacity can be realized with any of the types discussed in this BP. Modernization or upgrade of the switchgear may be accomplished either by a complete replacement or a retrofit of existing switchgear with new circuit breakers (interrupters).

5.0 Information Sources

Baseline Knowledge:

1. Siemens, *Tech Topic No. 71, Generator Circuit Breakers*
2. Siemens, *Tech Topic No. 72, Generator Circuit Breakers*
3. USACE, Hydro Plant Risk Assessment Guide, *Appendix E2, Circuit Breaker Condition Assessment*
4. TVA, *Design of Projects Technical Report No. 24 Electrical Design of Hydro Plants*
5. Electric Power Research Institute, *Power Plant Electrical Reference Series, Vol. 7, Auxiliary Electrical Equipment*

State of the Art:

6. *Energy Tech Article Hydroelectric Power Station Nears Completion of Challenging Switchgear Project, June 2009*
7. *17th Annual Conference on Electricity Distribution, Vacuum Interrupters for Generator Circuit Breakers, They're Not Just for Distribution Circuit Breakers Anymore", May 2003*

Standards:

8. *IEEE, STD C37.013 Standard for AC High Voltage Generator Circuit Breakers Rated on a Symmetrical Current Basis*
9. *IEEE, STD C37.013a Standard for AC High Voltage Generator Circuit Breakers Rated on a Symmetrical Current Basis – Amendement 1 : Supplement for Use with Generators Rated 10-100 MVA*
10. *IEEE, STD C37.010 Application Guide for AC High Voltage Circuit Breakers Rated on a Symmetrical Current Basis*
11. *ANSI, C37.06 AC High Voltage Circuit Breakers Rated on a Symmetrical Current Basis-Preferred Ratings and Required Capabilities*
12. *ANSI, C37.20.7 – IEEE Guide for Testing Metal Enclosed Switchgear Rated Up to 38 kV for Internal Arcing Faults*
13. *ANSI, C37.20.2 – IEEE Standard for Metal Clad Switchgear*
14. *ANSI, C37.04 – IEEE Standard Rating Structure for AC High-Voltage Circuit Breakers Rated on a Symmetrical Current Basis*
15. *IEEE Std C37.20.7 Guide for Testing Metal-Enclosed Switchgear Rated Up to 38 kV for Internal Arcing Faults*
16. *OSHA 29 Code of Federal Regulations (CFR) Part 1910, Subpart S*
17. *NFPA 70E, "Standard for Electrical Safety Requirements for Employee Workplaces"*
18. *IEEE 1584, Guide for Arc Flash Hazard Analysis*

Best Practice Catalog

Station Power System

Revision 2.0, 11/15/2012

1.0 Scope and Purpose

This best practice for the Station Power System (SPS) discusses design components, condition assessment, operations, and maintenance best practices with the objective to maximize overall plant performance and reliability.

The primary purpose of the SPS in a hydroelectric plant is to provide power for plant operation. Power may be sourced locally by generator(s) or via offsite power.

1.1 Hydropower Taxonomy Position

Hydro Power Facility → Powerhouse → Power Train Equipment →
Balance of Plant/Auxiliary Components

1.1.1 Station Power System (SPS) Components

The components of the Station Power System (SPS) which relate to performance and reliability consist of station auxiliary transformers, main or station service boards, chargers, UPS, and inverters.

Station Auxiliary Transformers: Station Auxiliary Transformers (SAT) generally provide power to the generator and plant essential loads via unit and common boards. SATs can be sourced either from the generator or from the utility grid. SATs can step-down voltage directly to the plant's low voltage level (480V level) or medium voltage level (2300V or 4160V). Figure 1 shows a typical configuration for a SAT sourced by a generator.

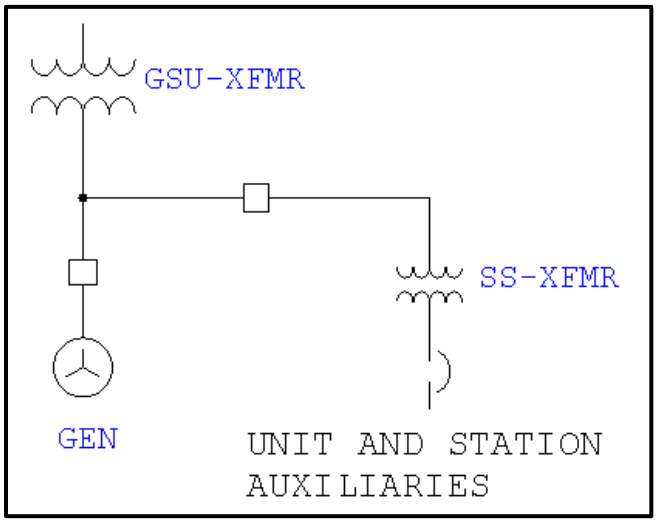

Figure 1: Typical Configuration for Station Power Transformer

SAT insulation may either be liquid-immersed or dry type. The liquid-immersed type can be further defined by the types of liquid used: mineral oil, nonflammable, or low flammable liquids. The dry type includes ventilated, cast coil, totally enclosed non-ventilated, sealed gas-filled, and vacuum pressure impregnated (VPI) types. The selection of the insulation medium is dictated mainly by the installation site and cost. For outdoor installations, the mineral-oil insulated transformer is often used due to its low cost and inherent weatherproof construction. Where mineral-oil immersed transformers are installed, it may be necessary to provide means to prevent any escaped oil, including drips, from migrating into the environment.

The ventilated dry-type transformer has application in industrial plants for indoor installation where floor space, weight, liquid maintenance, and safeguards are key factors. Although more expensive than ventilated dry-type or mineral-oil-immersed units, the totally enclosed non-ventilated dry-type transformer, the cast coil (where both the high and low-voltage coils are cast), and the sealed or gas-filled dry-type transformer are especially suitable for adverse environments. They require little maintenance, need no fire-proof vaults, and generally have lower losses than compared to ventilated or mineral-oil immersed units

Hydro plants in recent times have transitioned their SATs from liquid-filled to dry-type due to advances in dry-type transformer design. These advances have eliminated the need for liquid-immersed station auxiliary transformers. Transformers used for plant electrical auxiliaries today are usually dry-type transformers and may be located indoors or outdoors depending upon plant configuration.

Dry-type transformers are air-cooled as opposed to liquid-cooled. They have voltage ratings up to 72 kV and 63 MVA, which is well beyond the usual requirements for hydroelectric plants. Because air cooled transformers present less of a fire hazard than liquid-immersed types and no containment provisions are needed for liquids, they are preferred for indoor applications at hydroelectric plants. For more details about classifications and types of station power transformers, refer to Section 5.0 Information Sources.

<u>Main or Station Service Boards</u>: The main or station service board is another critical component of the SPS. These boards are generally switchgear and will feed unit critical loads and/or plant common loads. Switchgear is a general term that describes switching and interrupting devices, either alone or in combination with other associated control, metering, protective, and regulating equipment which are assembled in one or more sections. Typically, these boards should be provided with two sources if the plant configuration allows and automatic transfer to maximize uptime of the plant auxiliary loads especially if the hydro plant has multiple units.

There are three major types of switchgear: open, enclosed, and metal-enclosed. For the purpose of this document, we will only consider metal-enclosed of two types: metal-clad and low-voltage.

Metal-clad switchgear, as categorized by IEEE Std. 141-1993 [14], is metal-enclosed power switchgear characterized by the following features:

- The main circuit switching and interrupting device is of the removable type arranged with a mechanism for moving it physically between connected and disconnected positions, and is equipped with self-aligning and self-coupling primary and secondary disconnecting devices
- Major parts of the primary circuit, such as the circuit switching or interrupting devices, buses, potential transformers, and control power transformers, are enclosed by grounded metal barriers. Specifically included is an inner barrier in front or part of the circuit interrupting device to ensure that no energized primary circuit components are exposed when the unit door is opened.
- All live parts are enclosed within grounded metal compartments. Automatic shutters prevent exposure of primary circuit elements when the removable element is in the test, disconnected, or fully withdrawn position.
- Primary bus conductors and connections are covered with insulating material throughout. For special configurations, insulated barriers between phases and between phase and ground may be specified.
- Mechanical or electrical interlocks are provided to ensure a proper and safe operating sequence.
- Instruments, meters, relays, secondary control devices, and their wiring are isolated by grounded metal barriers from all primary circuit elements, with the exception of short lengths of wire associated with instrument transformer terminals.
- The door through which the circuit-interrupting device is inserted into the housing may serve as an instrument or relay panel and provide access to a secondary or control compartment within the housing.

If the plant has a need to source motors and pumps greater than 200 hp, then generally this board will be rated at the medium voltage level (2300V or 4160V). Figure 2 shows a typical low voltage switchgear line up for a main or station service board.

Figure 2: Typical Switchgear lineup for Station Service Power System

Metal-enclosed power circuit breaker switchgear of 1000V and below, as categorized by IEEE Std. 141-1993 [14], is metal-enclosed power switchgear with the following required equipment:

- Power circuit breakers of 1000V and below (fused or unfused).
- Non-insulated bus and connections (insulated and isolated bus is available).
- Instrument and control power transformers.
- Instrument, meters and relays.
- Control wiring and accessory devices.
- Cable and busway termination facilities.

Low voltage (LV) metal-enclosed switchgear is typically used to distribute station service power within hydroelectric power plants that have substantial auxiliary loads. In such applications, the switchgear can provide an effective, safe, and economic means for ensuring continued station service.

The switchgear falls under the American National Standards Institute (ANSI) standards for metal-enclosed switchgear and includes power circuit breakers capable of handling voltages from 240V to 600V and consisting of removable circuit breakers with a bare primary bus. Plants with a limited number of auxiliary loads typically use power distribution panelboards with molded case circuit breakers (MCCBs) or motor control

centers (MCCs) to feed auxiliary loads. For more details about classifications and types of switchgear, refer to Section 5.0 Information Sources.

Batteries: Battery systems (large or small) are installed in every hydroelectric powerhouse to provide continuous power. Station battery systems are one of the most crucial electrical systems in a hydro plant because the battery system provides power to critical controls, protective relays, and interruptible power systems associated with computers that control plant operations.

In addition, the station battery system will have to be capable of "black starting" the plant in the event of a system-wide outage which includes field-flashing a generator. Figure 3 shows an arrangement of lead-acid batteries which form a battery bank.

Figure 3: Lead Acid Batteries in a Bank

While there are many types of batteries, the two major categories are flooded liquid electrolyte (such as lead acid antimony, nickel cadmium) and sealed or low maintenance (lead acid calcium and lead acid/special alloy and sealed nickel cadmium) batteries.

Some differences between nickel cadmium (Ni-Cd) and lead acid batteries are that Ni-Cd has higher energy density and better low temperature performance. On the other hand, lead acid batteries are less expensive and require simpler charging schemes.

Sealed batteries have reduced maintenance requirements, require less space for equivalent capacity, and may eliminate ventilation requirements. However, flooded designs are more robust, have lower total costs, and more predictable performance.

Many hydro plants have retained flooded cells due to their proven track record of reliability. However, required capacity increases and limited space in existing facilities may make the sealed technologies preferable.

Chargers, UPS, and Inverters: Battery chargers supply continuous charge to the plant's battery system. To assure reliability of the DC power system, many facilities utilize redundant charges in either a load sharing or a main/backup configuration. The primary methods used today for battery charging are constant-potential or constant-current.

The battery charger should be large enough to supply the plant constant loads (when AC power is available) and to fully charge the batteries within 8 to 24 hours depending upon plant design criteria.

The constant-potential method monitors the voltage of the battery and automatically tapers off the amount of charging current as the cell approaches the fully charged condition. This method is preferred when voltage needs to be maintained. The charger should be capable of supplying a float or equalizing charge with no more than a plus or minus 1 percent voltage variation with a plus or minus 10 percent supply voltage variation and over a plus or minus 5 percent supply frequency variation. Precise voltage regulation is required because minor voltage variations on the charger output will drastically change the amount of charging current sent to the batteries, resulting in either battery overcharging or undercharging. This method is the one most often used at hydroelectric plants.

The constant-current method feeds a constant charging current into station batteries for a certain period of time regardless of the cell voltage. This method is prevalent in industrial applications where batteries are continuously discharged and is generally not as suitable for hydroelectric plants.

Uninterruptible power supplies (UPS) and inverters are systems that supply continuous uninterrupted AC power to critical or plant essential loads such as computers used for plant controls, communication networks, security systems, emergency lights, board controls, and fire protection equipment. In general, these are divided into static and rotary systems. Rotary systems typically include an alternating current (AC) motor generator set with a flywheel, rectifier, inverter, storage batteries, static transfer switch, a manual transfer bypass switch, and solid state control circuitry. Static systems consist of a rectifier, inverter, storage batteries, static transfer switch, bypass input transformer, manual transfer bypass

switch, and solid-state control circuitry. Figure 4 shows a typical one-line diagram for a UPS system.

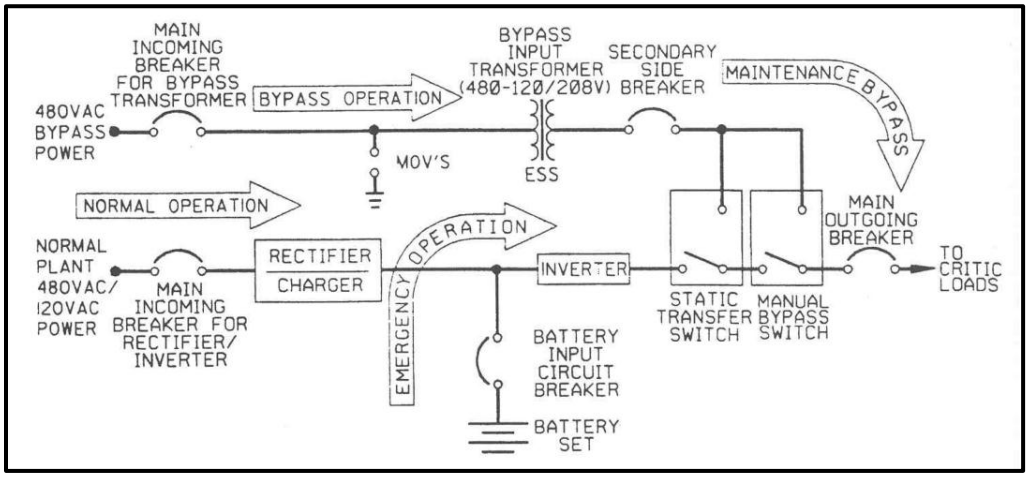

Figure 4: Typical Uninterruptible Power Supply (UPS) System

Because of the installed station battery capacity, many hydro plants choose to incorporate these elements into the preferred power system and utilize only an inverter and transfer switches in lieu of a complete static UPS system.

In addition to chargers, UPS and inverters, distribution panels are used to feed critical loads from the plant's battery board or preferred power system. Typically, the plant battery panelboard (DC board) and preferred power panelboard can be of varying configurations base on the plant layout. The preferred AC panels utilize circuit breakers while the DC boards may use either circuit breakers or fused disconnect switches. Figures 5 and 6 show typical examples of these systems.

Figure 5: DC Battery Panelboard

Figure 6: I-Line Type Power Panelboard

The plant battery board can range from 48VDC to 250VDC and generally powers critical DC loads such as generator excitation, protective relaying, and other critical loads. The 120V preferred power system is usually fed from either the plant batteries through an inverter or from an UPS and generally powers critical AC loads.

Reliability related components of a SPS include protection relays, plant relaying, control systems, 120V non-preferred power boards, and other low voltage DC systems of less than 48V.

1.2 Summary of Best Practices

1.2.1 Performance/Efficiency & Capability – Oriented Best Practices

Station Auxiliary Transformers:

- Maintain transformer loading to less than 100% of the full load OA/FA temperature rating. This will reduce the overheating of transformer windings and other components which can result in degradation of the manufacturer rated life expectancy and lower overall performance and efficiency.

Main or Station Service Boards:

- Maintain switchgear bus loading to less than 100% of the full-load amp rating.
- Perform short-circuit analysis to assure switchgear bus and breaker interrupting ratings exceed available fault currents anytime there are system or generator upgrades.

Batteries:

- Maintain battery room temperature to 25°C (77°F). Higher temperatures increase the rate of chemical reactions while lower temperatures reduce the rated output of the battery.
- Ensure that specific gravity considerations are met. Specific gravity affects overall battery performance and capability. See Section 3.2 for battery maintenance.
- If plant DC loads have been increased, perform a battery load study to assure battery sizing is adequate for the required length of time.

Chargers, UPS, and Inverters:

- Periodically inspect UPS and associated system components to ensure functionality and capability during a total loss of power.

1.2.2 Reliability/Operations & Maintenance – Oriented Best Practices

Station Auxiliary Transformers:

- For both liquid-immersed and dry-type transformers, refer to manufacturer recommendations and IEEE Standards C57.93 and C57.94 [15 and 16] for further operations and maintenance best practices.

Main or Station Service Boards

- Perform yearly infrared (IR) scans for thermal imaging of all associated bus bars, welds, and bus connections in order to determine excessive heating due to component separation and/or arcing between bus components.

- All power circuit breakers (PCB) and molded-case circuit breakers (MCCB) should be tested in accordance with manufacturer's recommendations – typically every 1-3 years depending upon service conditions (environment, frequency of operation, high fault current interruptions).

Batteries

- Perform inspection, testing and maintenance of battery systems in accordance with the manufacturer's recommendations and IEEE 450 for vented lead acid [17], IEEE 1106 for Ni-Cd [18], or IEEE 1188 for value-regulated lead acid [19] recommended practices.
- Utilize online battery systems which provide continuous measurements of critical parameters such as voltage, current, impedance, and temperature in order to monitor and reduce maintenance requirements.
- Ensure that all cabling is clean, free from acidic deposits, and that proper connections are made.

Chargers, UPS and Inverters

- Perform periodic full load test of UPS systems to ensure reliability.

1.3 Best Practice Cross-references

- Electrical– Main Power Transformer
- I&C– Automation

2.0 Technology Design Summary

2.1 Material and Design Technology Evolution

The station power system has evolved as the individual components that make up the system have evolved. In many cases, vacuum tubes have been replaced with transistors, flywheels for UPS systems with static systems, liquid-immersed transformers with dry-type transformers, and switchgear with stronger and more durable components have replaced vintage equipment. The result of this evolution is equipment with higher capacities, greater efficiencies, and improved reliability with reduced maintenance requirements.

2.2 State of the Art Technology

State of the art technologies for station auxiliary transformers, main and auxiliary boards, batteries and UPS systems are discussed below and will focus on new advances in modern engineering and design.

<u>Station Auxiliary Transformers (SAT)</u>

Since most SATs fed from GSUs are located indoors, hydro plants normally opt to use dry-type transformers in order to reduce the potential for fire hazards. Three types of dry-type transformers used for SATs are listed as follows:

- Vacuum Pressure Impregnated (VPI)
- Vacuum Pressure Encapsulated (VPE)
- Cast Coil Epoxy Resin (Cast Coil)

Cast coil transformers are the most robust of the three and generally the most expensive. Cast coils are simply windings which have been placed in molds and vacuum cast with an epoxy resin compound. The clearest advantage of cast coils over ventilated dry and liquid filled coils is mechanical strength. The epoxy casting is extremely inert and renders the windings impervious to moisture, dirt, and most corrosive elements. For future transformers, designers seek to reduce losses from both hysteresis and eddy currents by utilizing evolving transformer technologies such as amorphous metal cores.

<u>Main/Station Service Boards</u>

As safety from arc flash hazard becomes more of a concern, the demand for arc resistant switchgear will increase. New technologies are being developed to prevent internal components, doors, and glass from opening and being projected away from the switchgear due to extreme pressure build-up during a fault.

Low voltage switchgear design trends are expected to continue with greater interrupting capacities, reduced space, and increased embedded intelligence and communication capabilities.

For medium voltage switchgear, partial discharge testing and circuit breaker monitoring may be implemented. SF_6 indoor switchgear, which is inherently arc resistant, is now available. Over time, this standard may become more of an economic solution for medium voltage switchgear replacement.

In addition, light sensing methods using fiber optic detection systems are being integrated into new switchgear designs to isolate energy feeds during the commission of a fault. Arc detection systems are protection systems that use sensors to detect the presence of an internal arc and then isolate the faulted section by opening the incoming feeder circuit breaker. In general two types of systems exist:

- Pressure relief systems
- Light detection systems

Figure 7 shows a typical design of a venting chamber used to direct the buildup of pressure due to arc flash. Note that care must be taken to duct the arc energy to a location that does not jeopardize personnel or plant equipment.

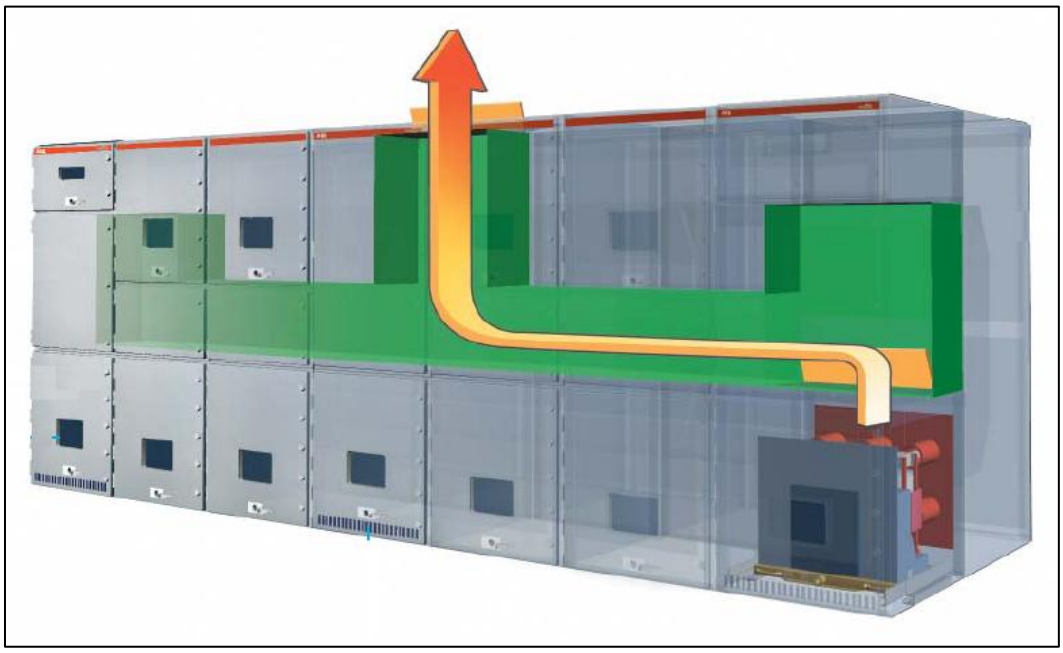

Figure 7: Venting Chamber Design for State-of-the-Art Switchgear

Figure 8 shows a typical optical sensor used to detect light due to arc flash. Because this optical system detects light, the clearing time is usually about 0.1 seconds (6 cycles) or less.

Figure 8: Optical Sensor for Arc Flash Detection

Batteries

Currently the most widely used battery types for hydroelectric plants are wet cell lead acid batteries. These batteries require maintenance and take up a large footprint in a plant. Some hydro plants have begun to implement sealed wet cell batteries in order to reduce the maintenance requirements of the batteries. Even newer technology that is in the process of being tested for hydro plants is that of lithium-ion (Li-ion) batteries.

A major advantage for Li-ion battery technology compared to the lead acid battery system is the reduced amount of floor space required. The batteries are fully sealed and reduce maintenance giving a number of advantages for plant maintenance crews. Problems associated with the build-up of hydrogen gas and handling of acid are reduced or eliminated. On-site maintenance is also reduced due to the ability to view charge status and other parameters remotely. These advantages are reasons for continued research in this field. Currently, the highest obstacle against the Li-ion batteries today is cost. However, developments in the electrical vehicle industry are expected to decrease the cost level.

Other battery types, such as lithium polymer, are being developed and will likely have a wider deployment due to lower production costs. Long term, battery testing and technologies are developing a Li-ion battery that has a 20 year lifetime making it very robust and attractive to hydroelectric plant maintenance departments due to reduced maintenance efforts. No additional cooling has to be provided for Li-ion batteries as they are designed to work without aging in temperatures up to 60°C. The only recommended maintenance requirement is that plant personnel

perform a 5 hour discharge test annually. This process can be used to detect the aging of the battery.

Due to environmental advantages, space savings, and reduced maintenance operation, the Li-ion battery will be an appealing alternative for lead acid batteries once the price level becomes more competitive.

Chargers, UPS, and Inverters

Advances in UPS technologies have caused a transition almost exclusively from rotary flywheel-type systems to solid state (static) systems which include advanced control systems.

Generally, there are two major types of static UPS systems for capacities typically required at hydro plants: 1) double-conversion and 2) delta-conversion. The double-conversion UPS represents greater than 90% of the UPS systems installed and supports a wide load range (10kW - 1.6MW).

A slightly newer technology for UPS systems is the delta-conversion type which is smaller, requires less maintenance, and has the highest efficiency (lower cost).

Future UPS evolution is in designing higher efficiency systems which can support all types of load demand from real to highly reactive.

3.0 Operation & Maintenance Practices

3.1 Operations

A typical life span for the following station power components is as follows:

- Station/Unit Auxiliary Transformers – 20-30 years
- Main Auxiliary Boards (Switchgear) – 30-40 years
- Wet Cell Batteries – 15-20 years
- Chargers, UPS and Inverters – 20-30 years

While breakers in switchgear boards and distribution panels are required to operate during a fault condition or in order to isolate a power source, no further operation is required. All other components of station power are meant to operate for the life of the device.

3.2 Maintenance

Maintenance is essential to proper operation. The installation should have been designed so that maintenance can be performed with onsite or contract personnel. During times of maintenance, redundant or backup systems may be utilized so that maintenance can be performed without impact difficulty or excessive cost to the utility. Where the continuity of service is essential, suitable transfer equipment and alternate sources should be provided. Such equipment is needed to maintain minimum lighting requirements for passageways, stairways, and critical areas as well as to supply power for critical loads. These systems usually include automatic or manual equipment for transferring loads during loss of normal supply power. Annual or other periodic shutdown of electrical equipment may be necessary to perform electrical maintenance.

<u>Station Auxiliary Transformers</u>

To avoid failures and problems, it is essential to conduct a program of careful supervision and maintenance. The life of a transformer is highly dependent upon the heat prevailing in the windings and core of the unit and the quality of the liquid in circulation, if applicable. Therefore, it is important that the temperature be monitored and integrity of the dielectric liquid (if liquid-filled) be maintained at a high quality.

For the first few days after a purchase and recent energization of a new transformer, daily inspections are recommended, before the warranty period ends. If applicable, oil samples should be taken at 24 and 72 hours after carrying normal load to check for abnormal gas generation.

Per IEEE Std. C57.93 [14], the following recommended maintenance practices for liquid-immersed type transformers are to be followed monthly, yearly, one to three years, and three to seven years:

Note: Before performing any maintenance on energized equipment, ensure that the plant's Lockout/Tag-out procedure has been followed and that equipment has be de-energized.

Monthly maintenance practices for liquid-immersed transformers.

- Check all liquid level gauges including main tank, oil expansion tank, and bushings

- Record winding hot spot and top liquid temperatures (both instantaneous and maximum values); reset all maximum indicators hands on temperature gauges.
- For gas-blanketed transformers, the transformer gas pressure should be recorded. The cylinder pressure of transformers equipped with nitrogen systems should also be checked.
- For transformers with an oil expansion tank, inspect dehydrating breather.
- Check the pressure relief device for operation or a target indication.
- Check the bushings for chipped or broken sheds.
- Check the arresters for broken or damaged sheds.
- Check the general condition of the unit, including ground connections, paint condition, possible liquid leaks, etc.
- If applicable, test transformer alarm annunciator and any other monitoring or alarm device.
- Check transformer loading, voltage, and neutral current values.
- Transformers equipped with auxiliary cooling equipment such as fans and pumps should have their fans and pumps tested to ensure operation.
- Unusual or abnormal conditions may require further investigation or tests.

Yearly maintenance practices for liquid-immersed transformers

- Inspect coolers for leaks.
- Check cooler fans and fins for damage and proper operation.
- Clean coolers.
- Infrared (IR) thermography may be appropriate; record ambient temperature, winding and top oil temperatures, and loading. Hot spots may be located in the main tank, bushings, tap changer compartments, control cabinets, coolers/radiators, fans and pumps, overhead connections and ancillary equipment.

One to three year maintenance practices for liquid-immersed transformers.

- Test transformer insulating liquid for dielectric strength and note color of oil.
- Conduct a total combustible gas (TCG) analysis test of the gas space on all gas-blanketed transformers.
- Conduct a dissolved gas analysis. Use IEEE Std. C57.104-1991 for testing guidelines.

Three to seven year maintenance practices for liquid-immersed transformers.

- Inspect the bushings for any chipped spots; clean the surface to remove any foreign material.

- Check all external connections, including ground connections, to assure a solid mechanical and electrical connection.
- Conduct power-factor or dissipation factor tests of the transformer and bushing insulation systems.
- Verify the integrity of thermal and alarm sensors and circuitry
- A transformer-turns-ratio test should be conducted
- Winding resistance measurements should be made and compared with factory measurements.
- Verify the condition of all oil pumps by checking running current.
- Inspect cooling system and electrical supply to pumps and fans.
- Core ground should be tested if accessible, and leakage reactance, as well as core excitation tests should be performed.

Per IEEE Std. C57.94 [16], the following recommended maintenance practices for ventilated and non-ventilated dry-type transformers are to be followed:

Yearly maintenance practices for dry-type transformers.

- Check that windings and insulators are free from accumulations of dirt and grime to permit free circulation of air and to guard against possibility of insulation breakdowns.
- Lead supports, tap changers and terminal boards, bushings, and other major insulating surfaces should be brushed or wiped with a lint free cloth. The use of liquid cleaners is undesirable because some of them have a solvent or deteriorating effect on most insulating materials.
- For sealed dry types, the gas pressure must be maintained and periodically checked. Inspection items should include bushings, tank and accessories.

<u>Main Auxiliary Boards</u>

To avoid failures and problems, it is essential to conduct a program of careful supervision and maintenance. Switchgears are designed to be virtually maintenance free with very few exceptions. Common practices of preventive maintenance are usually conducted around every 5 years, or per manufacturer recommendation for both medium-voltage and low-voltage switchgear. These practices will vary between the different manufacturers, but for the most part are common between all:

Note: Before performing any maintenance on energized equipment, ensure that the plant's Lockout/Tag-out procedure has been followed and that equipment has be de-energized.

Five to ten year maintenance practices for medium-voltage switchgear.

- Inspect the condition of the cubicle for soot, smoke, stained areas or other unusual deposits including oil or other liquids. In addition, check for metal shavings, nuts, bolts or anything that may have shaken loose during operation.

- Check to ensure that wiring and terminations are securely fastened. Check that insulation is intact – not brittle failing or discolored.
- Ensure that terminal blocks and lugs are not damaged and that there are no visible or loose connections.
- Ensure that there is no loose, broken or missing hardware. Ensure the integrity of secondary disconnects, shutter assemblies, male disconnects, instrument and control switches, space heaters, contacts, mechanical interlocks, etc.
- Ensure the integrity of the cell/breaker grounding contact.
- Ensure the integrity of all fuse holders, i.e. trip and close fuses, DC fuses, etc.
- Inspect the lift mechanism (if applicable) and all associated components to ensure integrity.
- Inspect current transformers (CT) for cracking, signs of overheating and discoloration. Check tightness of CT connections and all shorting blocks (if used) for continuity.
- Inspect potential transformers (PT) for cracking, signs of overheating and discoloration. Inspect and clean drawer slides and rollers, insulators, primary and secondary wiring, transformers and connections. Check tightness of connections; verify primary and secondary finger contact and wipes.
- Check, tighten and torque (as needed) all bus connections per manufacturer recommendations.
- Manufacturers recommend that breakers and trip modules associated with switchgear be drawn-out into test mode periodically and cycled in order to confirm functionality. The use of a breaker test kit may also be used to perform this test.

Five to ten year maintenance practices for low-voltage switchgear.

- Inspect the condition of the cubicle for soot, smoke, stained areas or other unusual deposits including oil or other liquids.
- Check to ensure that wiring and terminations are securely fastened. Check that insulation is intact – not brittle failing or discolored.
- Ensure that terminal blocks and lugs are not damaged and that there are no visible or loose connections.
- Ensure that there is no loose, broken or missing hardware. Ensure the integrity of secondary disconnects, shutter assemblies (if applicable), male disconnects, instrument and control switches, contacts, etc.
- Check, tighten and torque (as needed) all bus connections per manufacturer recommendations.
- Manufacturers recommend that where applicable, breakers and trip modules associated with switchgear be drawn-out into test mode periodically and cycled in

order to confirm functionality. The use of a breaker test kit may also be used to perform this test.

Batteries

To avoid failures and problems, it is essential to conduct a program of careful supervision and maintenance. Proper maintenance will prolong the life of a battery and will help enable the battery to satisfy its design requirements. A good battery maintenance program will serve as a valuable aid in maximizing battery life, preventing avoidable failures, and reducing premature replacement. Common maintenance recommendations, based on IEEE standards, will be listed for Vented Lead-Acid (VLA), Nickel-Cadmium (Ni-CD), and Valve-Regulated Lead-Acid (VRLA) batteries.

Per IEEE Std. 450-2010 [17], the following recommended maintenance practices for VLA batteries are to be followed monthly, quarterly, and yearly:

Monthly maintenance practices for VLA batteries.

- Check float voltage measured at the battery terminals.
- Check the general appearance and cleanliness of the battery, rack or cabinet area.
- Check charger output current and voltage.
- Check electrolyte levels.
- Check for cracks in cells or evidence of electrolyte leakage.
- Check for evidence of corrosion at terminals, connectors, racks or cabinets.
- Check ambient temperature and ventilation.
- Check pilot cells (if used) voltage and electrolyte temperature.
- Check battery float charging current or pilot cell specific gravity.
- Check for unintentional battery grounds.
- Check (if applicable) that all battery monitoring systems are operational.

Quarterly maintenance practices for VLA batteries.

- Check the voltage of each cell.
- For lead-antimony battery, check the specific gravity of 10% of the cells of the battery and float charging current. For technologies other than lead-antimony, if battery float charging current is not used to monitor state of charge, check the specific gravity of 10% of the cells of the battery.
- Check the temperature of a representative sample of 10% of the battery cells.

Yearly maintenance practices for VLA batteries.

- Check the voltage of each cell.
- For lead-antimony battery, check the specific gravity of all of the cells of the battery and float charging current. For technologies other than lead-antimony, if

battery float charging current is not used to monitor state of charge, check the specific gravity of all of the cells of the battery.

- Check cell condition. See IEEE Std. 450-2010 Annex E for guidelines.
- Check cell-to-cell and terminal connection resistance. See IEEE Std. 450-2010 Annex F for guidelines.
- Check the structural integrity of the battery rack and/or cabinet. See IEEE Std. 450-2010 Annex E for guidelines.

Per IEEE Std. 1106-2005 [18], the following recommended maintenance practices for Ni-CD batteries are to be followed quarterly, semiannually, and yearly:

Quarterly maintenance practices for Ni-CD batteries.

- Check float voltage measured at the battery terminals.
- Check the general appearance and cleanliness of the battery, rack or cabinet area.
- Check charger output current and voltage.
- Check electrolyte levels.
- Check for cracks in cells or evidence of electrolyte leakage.
- Check for evidence of corrosion at terminals, connectors, racks or cabinets.
- Check the adequacy of ventilation.
- Check pilot-cell electrolyte temperature.

Semiannual maintenance practices for Ni-CD batteries.

- Check and record the voltage of each individual cell.

Yearly maintenance practices for Ni-CD batteries.

- Check the integrity of the battery rack
- Check the intercell connection torque
- Check the resistance or cable connections.

Per IEEE Std. 1188-2005 [19], the following recommended maintenance practices for VRLA batteries are to be followed monthly, quarterly, and yearly:

Monthly maintenance practices for VRLA batteries.

- Check float voltage measured at the battery terminals.
- Check the general appearance and cleanliness of the battery, rack or cabinet area.
- Check charger output current and voltage.
- Check electrolyte levels.
- Check for cracks in cells or evidence of electrolyte leakage.

- Check for evidence of corrosion at terminals, connectors, racks or cabinets.
- Check ambient temperature and ventilation.
- Check for excessive jar/cover distortion.
- Check the DC float current (per string). This should be measured using equipment that is accurate at low (less than 1 A) currents.

Quarterly maintenance practices for VRLA batteries.

- Check cell/unit internal ohmic values per IEEE Std. 1188-2005 Annex C4.
- Check the temperature of the negative terminal of each cell/unit of battery per IEEE Std. 1188-2005 Annex B3.
- Check the voltage of each cell/unit per IEEE Std. 1188-2005 Annex B2.

Yearly maintenance practices for VRLA batteries.

- Check cell-to-cell and terminal connection detail resistance pf entire battery per IEEE Std. 1188-2005 C1 and Annex D.
- Check AC ripple current and/or voltage imposed on the battery per IEEE Std. 1188-2005 C5 and manufacturer.

<u>Chargers, UPS and Inverters</u>

To avoid failures and problems, it is essential to conduct a program of careful supervision and maintenance. IEEE Std. 944-1986 – *IEEE Recommended Practice for the Application and Testing for Uninterruptible Power Supplies for Power Generating Stations* was withdrawn based on the spectrum being too broad for UPS testing and maintenance. For this reason, the type and frequency of maintenance testing will be based on manufacturer's standards and recommendations.

4.0 Metrics, Monitoring and Analysis

4.1 Measures of Performance, Condition, and Reliability

Measures of performance, condition, and reliability for the station power system should be in accordance with IEEE standards and manufacturer recommendations and practices. General recommended practices for replacement of station power components such as transformers, switchgear, batteries and station battery backup components will be based on but are not limited to the following criteria:

- Transformers are to be replaced once insulation and/or other crucial components have significant wear or damage.
- Switchgear is to be replaced once the integrity of the components is no longer acceptable according to IEEE and manufacturer standards.
- Batteries are to be replaced once the capacity has fallen below 80% of its initial capacity.
- Station battery backup components are to be replaced once functionality has ceased beyond required expectations.

The graph in Figure 9 compares the full published life of a VLA battery discharge versus an end-of-life condition.

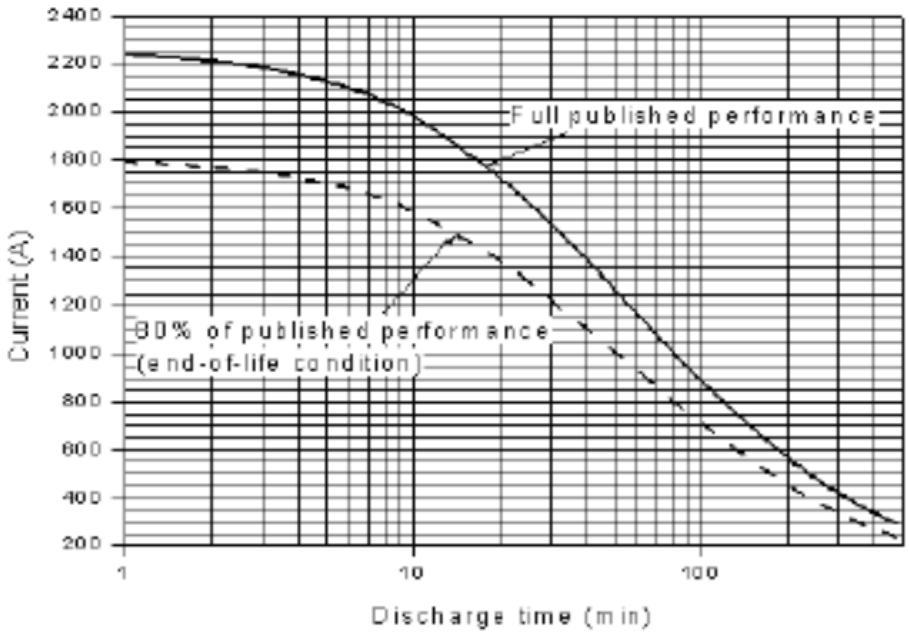

Figure 9: Current vs. Discharge Time – VLA Battery

4.2 Data Analysis

Trend analysis of test data (used for i.e. battery replacement) should be interpreted with the assistance of IEEE standards and manufacturer recommendations and practices. See Section 5.0 Information Sources for references.

4.3 Integrated Improvements

The periodic field test results should be used to update the performance characteristics of the subject components of the SPS. These can be integrated into computer programs to provide on-line analysis results and anomalies to all involved personnel. Parameters can be established to trigger various maintenance or immediate action activities as required. Data trends allow preventative maintenance to be performed in lieu of reactive maintenance.

As the condition of the SPS changes over time, the condition indicator and reliability indexes are trended and analyzed. Using this data, projects can be ranked and justified in the maintenance and capital programs to return the SPS to an acceptable condition and performance level or indicate the need for replacement for long-tem reliability and unit performance.

5.0 Information Sources

Baseline Knowledge:

1. *US Corps of Engineers, Hydro Plant Risk Assessment Guide, September 2006*
2. *Transformer Maintenance Guide*, Transformer Maintenance Institute, 2001
3. EPRI, *Increased Efficiency of Hydroelectric Power*, EM 2407, June 1992
4. David M. Clemen, *Hydro Plant Electrical Systems*, HCI Publications, Inc, 1999
5. TVA SMP-1222A, *Medium Voltage Switchgear, Boards and Cubicle Inspection and Maintenance*, January 2007
6. TVA SMP-1203A, *Six Year Inspection and Maintenance Low Voltage Metal-Enclosed Switchgear Board, Revision 0000*

State of the Art:

7. GE Industrial Systems, *Cast Coil Transformers*, EPO-560, September 2009
8. ABB, SafeGear, *The most advanced ANSI arc-resistant switchgear in the world*, 2010
9. RMS Protection and Control, *Optical Arc Fault Sensor*, 2012
10. Peter Kron, Bertil Nygren, Trond Beyer, *Field Experience From the World's Largest Stationary Lithium-Ion Battery, 2005*
11. Schneider Electric, Richard L. Sawyer, *Making Large UPS Systems More Efficient, White Paper 108, Rev 3*
12. Schneider Electric, Carl Cottuli, *Comparison of Static and Rotary UPS, White Paper 92, Rev 2*
13. Pioneer Electric, *Dry Type Power Transformers*

Standards:

14. IEEE Std 141-1993, *IEEE Recommended Practice for Electric Power Distribution for Industrial Plants*
15. IEEE Std C57.93, *IEEE Guide for Installation and Maintenance of Liquid-Immersed Power Transformers*
16. IEEE Std C57.94, *IEEE Recommended Practice for Installation, Application, Operation, and Maintenance of Dry-Type General Purpose Distribution and Power Transformers*
17. IEEE Std 450, *IEEE Recommended Practice for Maintenance, Testing, and Replacement of Vented Lead-Acid Batteries for Stationary Applications*
18. IEEE Std 1106, *IEEE Recommended Practice for Installation, Maintenance, Testing and Replacement of Nickel-Cadmium Batteries for Stationary Applications*

19. IEEE Std 1188, *IEEE Recommended Practice for Maintenance, Testing, and Replacement of Valve-Regulated Lead-Acid (VRLA) Batteries for Stationary Applications*

It should be noted by the user that this document is intended only as a guide. Statements are of a general nature and therefore do not take into account special situations that can differ significantly from those discussed in this document.

Best Practice Catalog

I&C for Automation

Revision 2.0, 08/14/2012

1.0 Scope and Purpose

The primary purpose of an automatic control system or automation system is to allow through computerized control the automatic starting, stopping, safe operation, and protection of any equipment being controlled. In the context of this document, equipment is a hydro generating unit and its associated components and auxiliaries. An additional benefit to an automation system is the ability to operate the hydro generating unit in a more efficient manner. Hydro generating units have been monitored and controlled by human operators for many years, both locally and remotely. Unfortunately, the generating efficiency is hard to be adequately optimized by human operators due to the vast number of variable parameters spanning multiple systems that can affect unit efficiency and rapidly changing variables. However, a computer system has the capability to analyze numerous parameters to determine optimum performance settings for a generating unit many times per second, which brings such a system a distinct advantage when trying to squeeze every last megawatt out of a limited supply of water resources.

1.1 Hydropower Taxonomy Position

Hydropower Facility → Powerhouse → Instrument and Controls → I&C for Automation

1.1.1 Plant Automation Components

Performance and reliability related components of a hydroelectric plant instrument and control system will vary based on the automation supplier's design. This component listing is based on a PLC (programmable logic controller) or RTU (remote terminal unit), PC based data server, PC based HMI (human machine interface), conventional panel boards for manual control, and SCADA (Supervisory Control and Data Acquisition) software. The term 'controller' will be used to represent either a programmable logic controller or current technology RTU.

<u>PLC (programmable logic controller)</u>: The function of a PLC is the heart of digital control system with programming capability that performs functions similar to a relay logic system. A PLC consists of a CPU (central processing unit), memory, power supply and a means of communications to I/O and other devices. The software includes ladder, block, sequential, structured text and other logic programming to control devices.

<u>RTU (remote terminal unit)</u>: The function of an RTU is to collect data and is similar to a PLC. Sometimes, it may be termed as PLC depending on the vendor terminology. RTU is generally associated with older (prior to 1998) control systems with minimal control capabilities, though it may also be a perfectly acceptable term for a current vendor offering. Use caution when making a quick assessment of systems based on these acronyms of RTU and PLC. The RTU is not always a lesser controller.

<u>Controller</u>: This can refer to either a PLC controller or a current technology RTU.

HMI (human machine interface): The function of the HMI is to be the interface for the operator to the control system. The HMI is normally a PC as the client portion of the client/server architecture. In some cases, the HMI and the server are the same PC.

Data Server: The function of a data server is to link to the controllers and the network to send data to the HMI and receive operator input from the HMI back to the controllers. The data server is normally a PC in a client/server application.

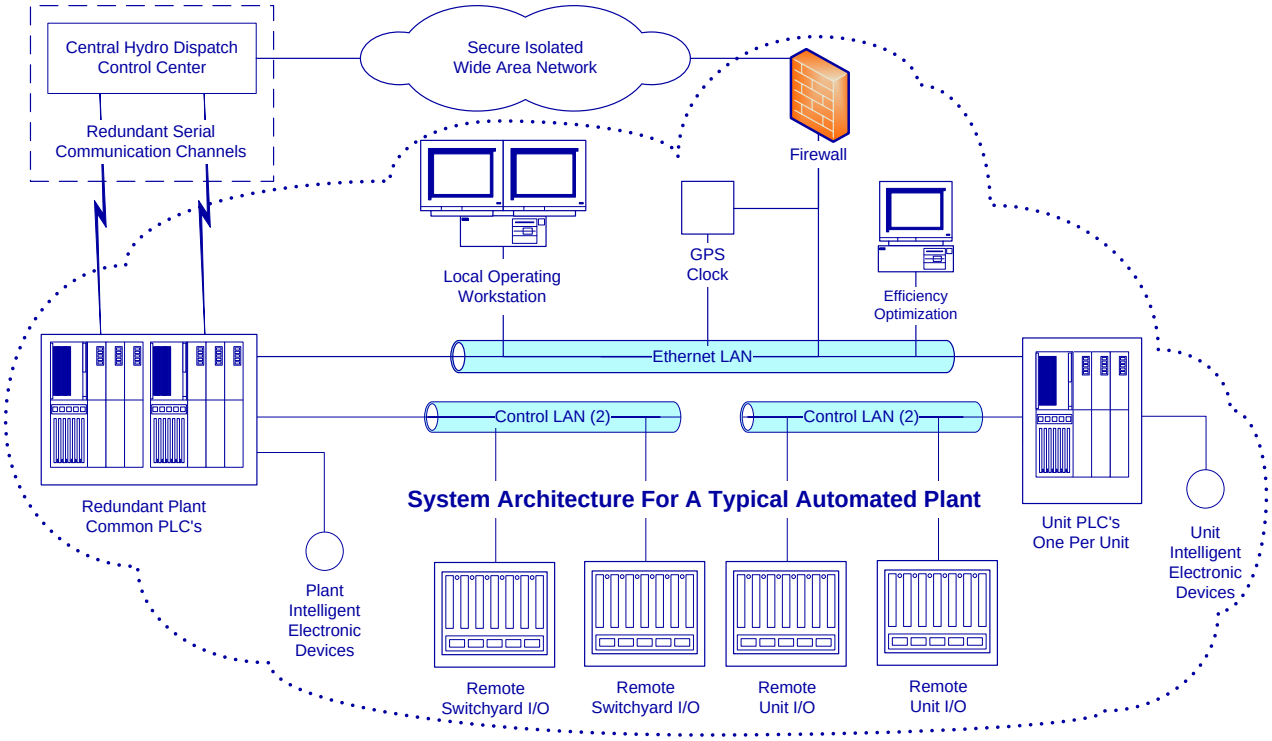

Figure 1: Typical Control LAN

Network LAN (local area network): There are normally two major networks in a hydroelectric control system.

- The TCP/IP network (Ethernet) links the server(s) to the HMIs, the controllers, data historians, firewall, and other Ethernet based devices. This is shown as the Ethernet LAN in Figure 1.
- The I/O network may also be Ethernet, though it is commonly a protocol used by the controls supplier such as Profibus™, Modbus™, DeviceNet™ etc. This is shown as the Control LAN in Figure 1.

- There are also secondary network connections to 3rd party devices tied directly to a controller through serial or Ethernet. This is shown as the links to the plant or unit electronic intelligent devices in Figure 1.

GPS Clock: This is for time synchronization in the control system.

SCADA (Supervisory Control and Data Acquisition): SCADA unfortunately tends to be an ambiguous acronym. Suppliers and end users have widely varying interpretations of what comprises a SCADA system. (See also RTU definition above.) As shown in Figure 2, an older SCADA system consists of RTUs (remote terminal units) that tie back to a central processor that primarily collects data and commonly uses proprietary communication protocols. Some controls suppliers refer to their current offerings (Dec. 2011) as a SCADA system, which has the same capabilities as a PLC based system or even is exactly a PLC based system. This can lead to some confusion. Generally, older SCADA/RTU systems (designed prior to 1998) have limitations in both logic handling and communications, which make them the candidates for upgrade. Over the decade, SCADA systems, PLC based systems and DCS (distributed control systems) have migrated towards being synonymous. These acronyms and their meanings vary with the culture or industry in which they were initially installed.

I/O (wired input and output to field devices): The function of I/O is to send commands to devices or receive information from devices.

- Traditional Analog and Discrete I/O: These are wired inputs and outputs that use voltage or current representing the status of a device, values and/or set points.

- Hybrid I/O: Hybrid I/O varies from traditional I/O in that digital communications are carried on the same wires as the voltage or current. This digital information generally contains diagnostic information about the connected device. Devices that support HART™ on top of a voltage signal are an example of a hybrid.

- Smart I/O: This communication signal is entirely digitalized. The accuracy exceeds traditional analog and it contains diagnostic information about the connected device.

- Safety I/O: This varies from traditional I/O in that the controller periodically tests the I/O to verify that the controller hardware is functioning properly.

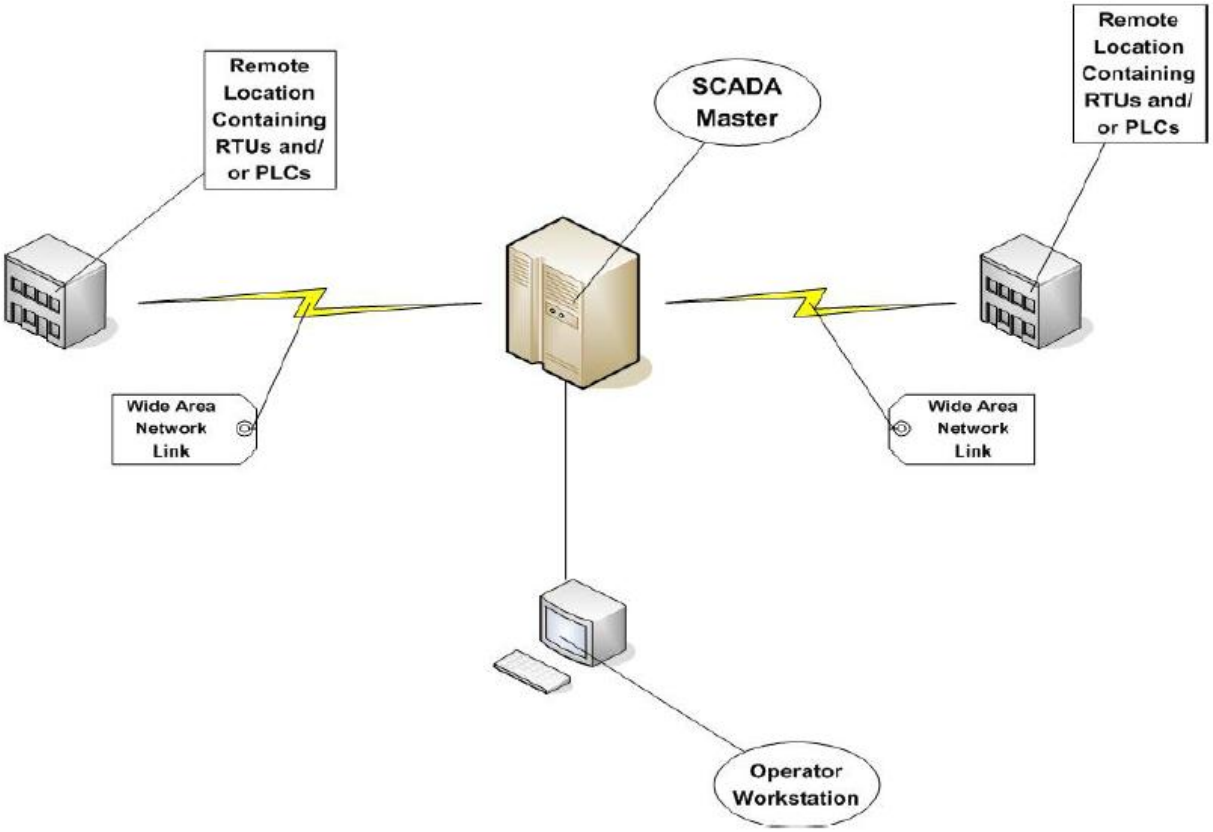

Figure 2: Common Older Style SCADA System [5]

Local Control (definition): Controls located at the equipment itself or within sight of the equipment. For a generating station, the controls are located on the unit switchboard-governor control station.

Automatic Control (definition): An arrangement of controls that provide for switching or controlling, or both, of equipment in a specific sequence and under predetermined conditions without operator intervention after initiation [1].

Non-performance but reliability related components of a control system.

Firewall: The function of a firewall is to restrict and protect the plant control network from outside unauthorized access. The firewall restricts communications in both directions protecting the process and data.

UPS (uninterruptible power supply): The function of the UPS is to provide temporary power to a system in case of main power failure. The UPS also acts as a power filter to protect control equipment. At hydro facilities, a large DC battery bank can also supply backup power through an inverter to the control system.

IDS (intrusion detection system): This device resides on the process control network to detect and log any intrusion attempts – failed or successful. Logs from firewalls can also be used as a limited form of intrusion detection.

Historical Archive: The function of the historical archive is to store historical information from the control system.

Reporting: The function of reporting is for GADS (Generating Availability Data System, as required by NERC - the North American Electric Reliability Corporation), production, scheduling etc. This is often accomplished on the server or client.

Syslogs: This is an important function to meet NERC-CIP requirements as defined below. Syslogs record software events from the computers, firewalls and other network devices that support Syslogs.

Engineering Workstation: The function of the engineering workstation is to configure the software for the control system controllers, servers, HMIs and other controls equipment.

Efficiency Optimization: This is a program that runs on top of the control system to maximize efficiency of the plant.

1.2 Summary of Best Practices

1.2.1 Performance/Efficiency & Capability - Oriented Best Practices

Use supervisory control that takes into account weather, demand, headwater and tailwater levels, fish habitat, outages, and other variables.

Use advanced control algorithms, within the controller, to optimize generator efficiency.

There should not be more than eight actionable alarms per hour per operator at any plant or for each operator at a central control facility.

Test all software before downloading or installing.

Design local control to be independent of the digital controller system in that the units can be operated from a bench board without the controllers and/or SCADA system in operation. Small generating units would be exempt from this practice.

Compare long term trends, seasonal and annual, to measure performance. Figure 3 shows a complex control system LAN (local area network) with its own historian. This control system LAN ties back to a corporate LAN which has its own historian. This structure allows operators to create their own trends locally. The corporate historian allows technical personnel the ability to study long term data. Figure 4 shows a similar complex system in hierarchical form.

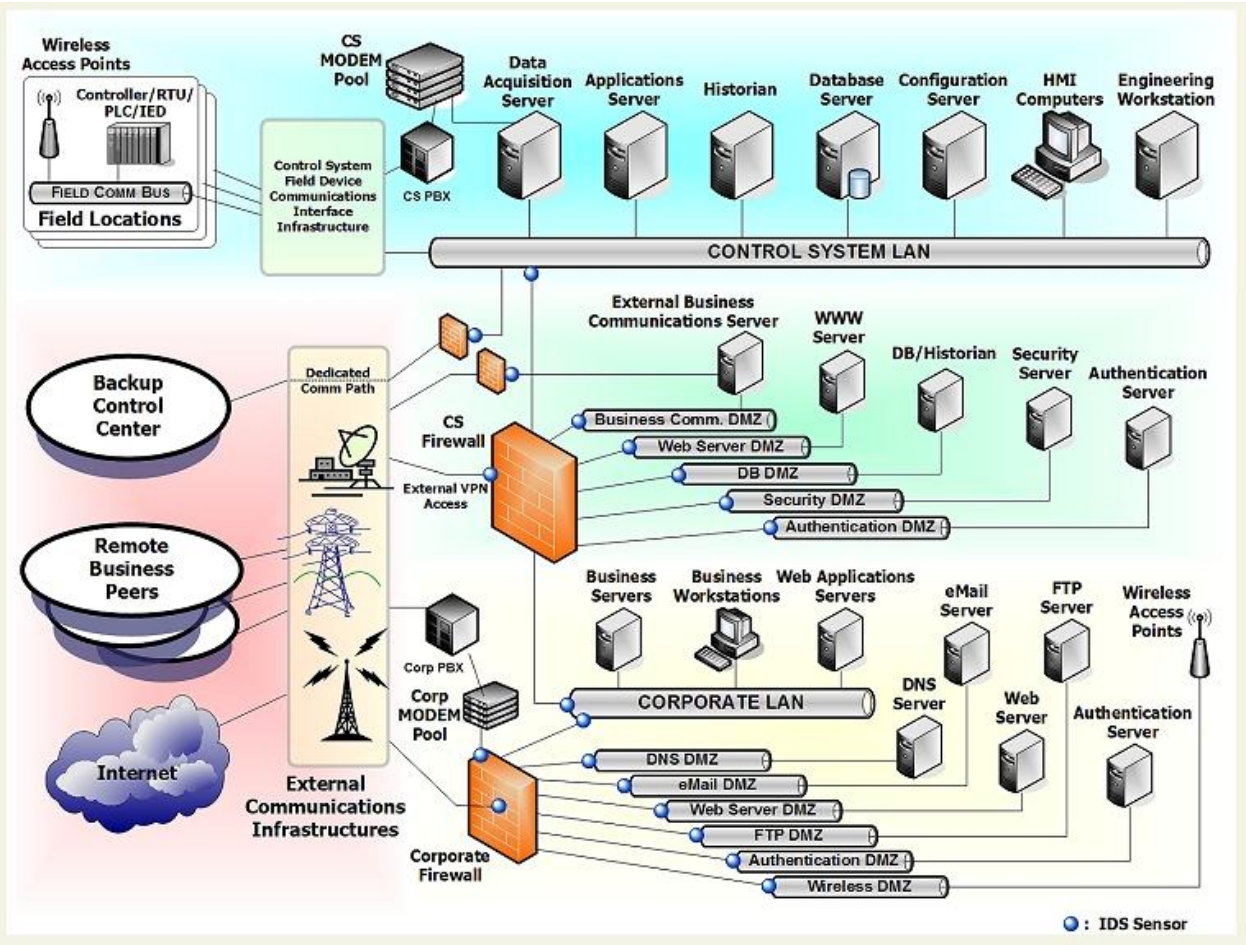

Figure 3: Control System at a Hydroelectric Plant, Showing Connections to a Central Location – Courtesy of CERT [4]

1.2.2 Reliability/Operations & Maintenance - Oriented Best Practices

- Use redundant power supplies and/or a UPS (uninterruptible power supply) or use the DC battery power, normally available at a hydroelectric facility, as an emergency backup.
- Use redundant controllers for critical control and communications
- Design the local control LAN to be redundant or in a ring.
- Design the I/O network (for remote I/O drops) to be redundant or in a ring.
- Units and all ancillary equipment should automatically go to a safe state on failure of a PLC or failure of critical instrumentation.

- Security is now part of reliability and is to be a part of the design, maintenance and upgrade of all parts of the control system.
- Use a firewall along with IPSEC (encryption) to protect the local control LAN.
- Periodically review the firewall Syslogs for intrusion attempts or unauthorized access. It is recommended to add intrusion detection for large systems and at the central control.
- Analyze every port, service and application of all PCs on the control LAN. Remove or disable all unneeded ports, services and applications on those PCs. Review these PCs periodically.
- Train local maintenance to periodically monitor the health of the control system.
- Design the system so that online diagnostics are available and clear to operations.
- Monitor corrosion and temperature in cabinets.

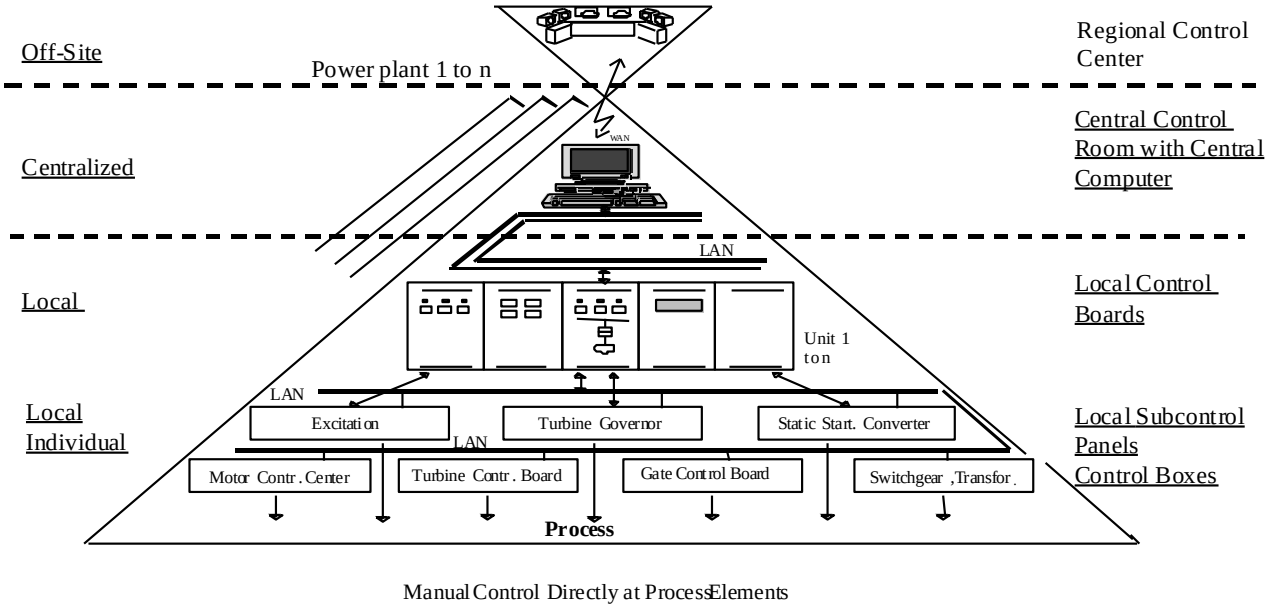

Figure 4: Central Control to Multiple Hydroelectric Plants [12]

1.3 Best Practice Cross-references

- I&C – Operator Base System
- I&C – Condition Monitoring
- Electrical – Generator
- Mechanical – Governor

2.0 Technology Design Summary

2.1 Technological Evolution

Automatic control systems for hydroelectric units based on electromechanical relay logic have been in general use for many years and, in fact, were considered standard practice for the industry. Within the past few decades, microprocessor-based controllers have been developed that are suitable for operation in a power plant environment. These computer-based systems have been applied for data logging, alarm monitoring, and unit and plant control. Advantages of computer-based control include use of graphical user interfaces, the incorporation of sequence of events, trending, automatic archiving and reporting into the control system. The incorporation of artificial intelligence and expert system capabilities also enhance the system [2].

The initial upgrade for older hydroelectric plants has been from a system that relied primarily on electromechanical relay logic to a computer based Supervisory Control and Data Acquisition (SCADA) systems. In an era of deregulation and competition, management needs more information than ever before, and as quickly as possible, regarding its own costs, efficiency and the market price for energy. That need for information is leading to the upgrading and re-engineering of SCADA systems nationwide with new software and hardware that is more productive, reliable, and which utilizes open standards architecture [11].The early SCADA systems used proprietary network communications and had rudimentary logic and information. Today's systems include more powerful controllers (PLCs or RTUs), open architecture (TCP/IP, DN3, Modbus™ etc.) and personal computers for HMIs (human machine interface).

2.2 Design Technology

Automation system design, operation, and maintenance have a major impact on unit efficiency, plant overall generation, and reliability. Best practice for the automation system begins with the ability to safely and securely control the entire facility both locally and remotely. The security of a control system supplants many previous design parameters, such as ease of remote network access, open wireless communications and easy physical access. Once a secure and fail-safe system is in place, the control system is then ready for optimization and high level control. Figure 5 shows a control system with firewalls and intrusion detection.

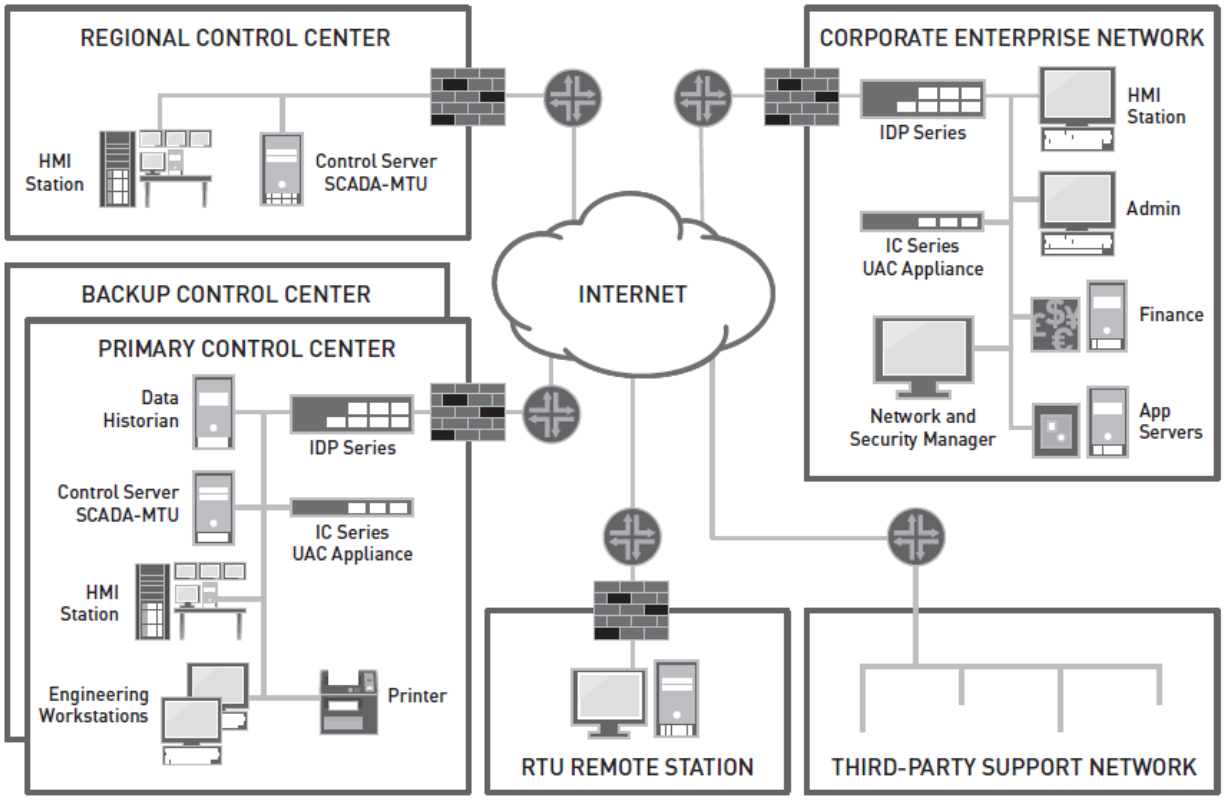

Figure 5: Securing a Typical Hydro Facility – Juniper Networks example [7]

Cyber Security (some overlap with hardware and software design)

Government owned hydroelectric facilities cyber security policies will fall under federal compliance requirements with both NERC [13] (North American Electric Reliability Corporation) and FISMA [3] (Federal Information Security Management Act). The general rule is that larger government owned facilities and facilities considered 'critical' fall under the stricter NERC standards which include substantial penalties, if violations are egregious. The guidelines (NERC or FISMA) are determined by the management of each utility and their interpretation of the selection guidelines along with agreement from federal officials. Brief summaries of the two standards are listed in this document since they are crucial to the design or the upgrade of a government owned hydroelectric control system. NERC standards apply to private or public owned utilities that fall under the NERC domain. The standards are in the NERC-CIP 002-009 and in FISMA's NIST 800-53 documentation. In particular, pay attention to appendix J of NIST 800-53 and NIST 800-82 [14].

At the 2011 "East Tennessee Cyber Security Summit", several vendors remarked that 80% of security incidents are discovered by 3rd parties. These 3rd parties may be local law enforcement, FBI, banks or the media. The overwhelming number of corporate

entities that were compromised did not have the ability to detect an intrusion nor a system in place to track the intrusion. Intrusions may go on for weeks or months without being detected or reported. The importance of cyber security cannot be over stated.

NERC Guidelines

NERC Critical Infrastructure Protection (CIP) standards rely heavily on documentation. Compliance with NERC-CIP should not be interpreted as being secure. [13]

2.3 State of the Art Technology

A secure reliable automation system that supports high level supervisory optimization is no longer a difficult technical achievement. The proper design of the automation system will allow for fail-safe local control, redundancy, secure communications and automated scheduling with optimization. Optimization routines are readily available from 3rd party vendors or may be written in-house with software packages that are becoming easier to program and employ standard communication protocols.

As the state of the art technology, critical control systems that may cause physical harm, equipment damage or significant economic loss upon failure should have an appropriate level of redundancy. But, not all redundancy listed below is required or recommended for all systems due to the expense involved.

- Redundant Power Source

  This is the most common form of redundancy and is recommended for all control systems. A redundant power source may be a UPS with the understanding that the UPS has a time limit in minutes based on the load and battery size. A UPS may also be used as a clean power source. Controllers commonly have the ability to be wired to dual power sources as a fundamental feature.

- Redundant Controller

  If a redundant controller is not used, verify that a failure of the controller will not inflict equipment damage or harm personnel. The system must have a safe mode on a loss of the lone controller. The mean time between failures (MTBF) of a system with redundant controllers, redundant power supplies, and redundant communications is nearly 10 times that of a standalone control system. See the result data in Table 1 from the study performed at the Large Hadron Collider Project in Europe using the Siemens 400 series PLCs [10].

Table 1: Redundant Controller MTBF

Standard System		Redundant System
1 CPU S7-414		2 CPU S7-414 4H (in separate racks)
1 Power Supply		2 Power Supplies (one in each rack)
1 Communications path to I/O		2 Communications paths to I/O
MTBF = 6.0 years		MTBF = 60.0 years

- Redundant Servers and Clients

  In client/server architectures, it is critical to have redundant servers. A server can be removed from service for patches and security modifications without shutting down the system. Personal computers (servers) have a high failure rate compared to controllers and should always be redundant. HMIs (clients) should be redundant so that an operator will not be blind on the loss of a lone operator's station. If the plant is normally operated remotely, a redundant operator station may not be required and its replacement may be made on the next business day without disrupting operations.

- Redundant Networking

  The cost of networking equipment has dropped dramatically. It is recommended to have redundant networking on critical systems or use a network ring so that a single break in the network will not shut down communications. Dependency on a single network switch is problematic and should be avoided.

- Redundant I/O

  This is rare for most hydro applications. It is more common to have critical data points, such as headwater level, to have dual sources. Vibration, temperature and other critical data also have multiple sources and are not dependent on a single input. Ideally these critical control inputs should be distributed among different I/O cards.

- Safety I/O

  This I/O is continuously monitored by the controller through self-checks. The controller can detect a failed I/O point and respond appropriately to this failure. It is not a requirement to use safety I/O in the majority of hydro control systems. If it is available and the cost is not prohibitive, it is recommended.

- Hot Swap

  An I/O or communications card should be replaceable without the need to power down the backplane (I/O rack) or without losing communications to the remainder of the cards mounted on the backplane.

- It is essential that the following functions can be carried out under backup conditions or failure of the main control system (PLC or RTU) [12]:

  Emergency stop

  Operation of spillways

  Operation of high voltage circuit breakers and isolating switches

  Starting and stopping of generator/turbine units

  Operation of the intake gate/turbine isolation (shutoff) valve

  Governor and excitation adjustments

3.0 Operation & Maintenance Practices

3.1 Condition Assessment

It is noticed that some key items are missing in control systems in even recent installations or upgrades of hydropower facilities in the United States (Dec. 2011). The items listed in this section will enhance IEEE Std. 1249:1996 [1], which is now undergoing a revision. Engineering and operations should carefully consider all these items in the control system selection. The overall goal of automation system is dependability, as the majority of hydro facilities are not manned 24/7. This listing is to promote the best selection for a hydro control system based on the needs for maximum system availability, safety of equipment and personnel, system optimization, standardized communications protocols, ease of maintenance and security.

The first step in assessing an automation system would be the determination of the condition of existing equipment which must be controlled. A major portion of that assessment would be the condition and capabilities of any required sensors or feedbacks already present. The following information will be a guide through the various systems necessary and help determine any upgrades which might be required.

<u>Turbines</u>

While the actual best practices to be considered for hydro turbines is being covered in another guide, there is still important information which must be gathered in order to allow the automation system to operate a unit at optimum efficiency. Depending on the design of the turbine, different levels of testing will have to be performed to determine the overall operating characteristics of the turbine. For instance a set of efficiency curves will have to be developed for a Francis unit over a range of flow, headwater elevation, and tailwater elevation conditions. But for a Kaplan unit much more data must be collected to cover all the blade tilt positions as well as the range of water flow conditions. Each type of turbine will have its own specific variations but basically a complete set of turbine efficiencies must be available for input into the automation software. Additionally the flow instrumentation, headwater elevation instrumentation and tailwater elevation instrumentation must be accurate and must have data outputs which are compatible with the requirements for the automation computer. Of course converters can be used if necessary. Typical efficiency curves for a Kaplan and a Francis turbine are shown below in Figures 6 and 7, respectively.

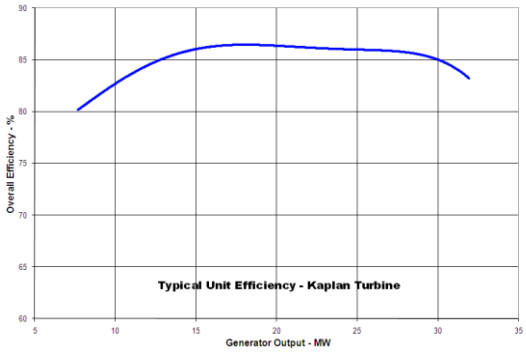

Figure 6: Kaplan Turbine

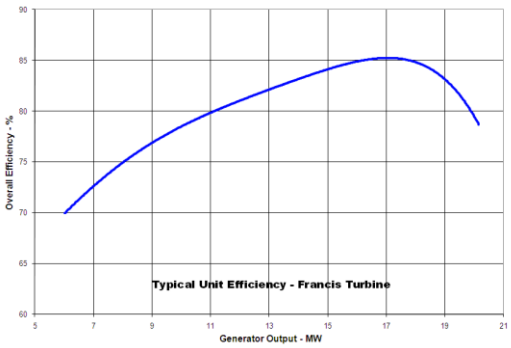

Figure 7: Francis Turbine

As can be seen from these curves the maximum efficiency point for a Francis turbine is extremely narrow while the Kaplan turbine has higher efficiencies over a much wider range. The Kaplan turbine achieves these wider ranges due to the added capability to alter the blade angle as operating parameters change. The control system needs to be assessed to verify that it can automatically control a unit in its highest efficiency range.

Governor Systems

The condition of the governor system and its instrumentation is important to optimizing hydro unit efficiency. It really does not matter if the governor is digital, electronic, or mechanical as long as it is in good operating condition and has tight feedback loops. Obviously a digital governor has an advantage in the fact that it will be the easiest to interface with the automation system but as long as the governor has good tight response to control changes and accurate instrumentation to provide feedback to the automation system you can achieve optimal efficiency.

Generator

While generator efficiency is mostly dictated by its initial design, the automation system must take into account the overall capabilities of the unit. Each generator has a specific capability curve which operating conditions must be monitored against to ensure no damage occurs to the unit. Of course these capabilities can be affected (lowered) by other components such as the excitation system, power cables, breakers capabilities, transformers, etc. The overall capability limits of the unit are vital information which must be considered by the automation software. In general the instrumentation required to monitor these limits will also be used by any efficiency calculations made by the system. A typical generator capability curve is shown below in Figure 8.

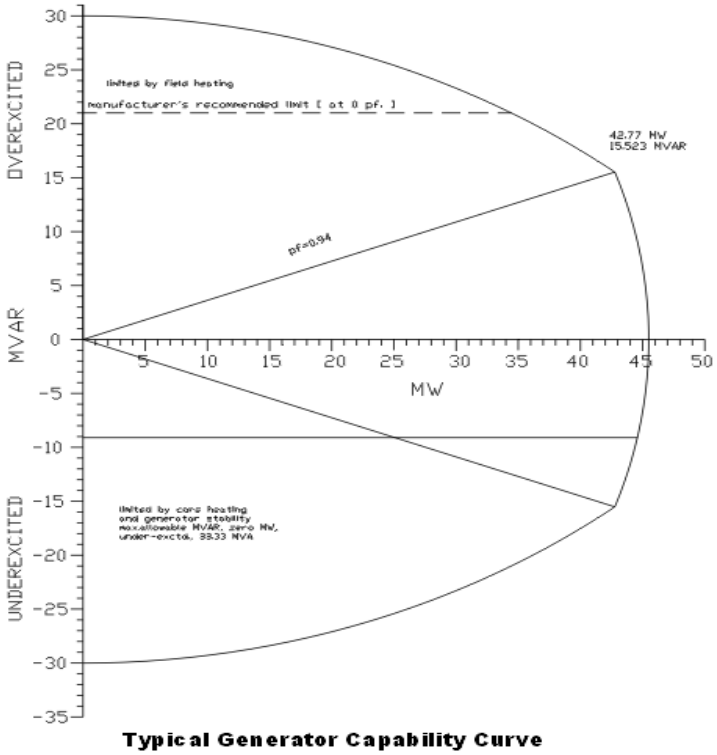

Figure 8: Typical Generator Capacity Curve

Excitation Systems

Again it really does not matter if the exciter is of digital or mechanical design as long as the equipment is in good working order and has adequate response times. However, a digital exciter again has an advantage in the fact that it will be much easier to interface with the automation system. Optimally the excitation system will have the capacity to operate the generator anywhere on the capability curve required. However, in some instances the existing exciter will not have the capacity required and those limits must also be considered in the automation system software.

Table 2 lists minimum instrumented inputs and outputs on an automated control system, such as a PLC, to control various devices or systems. The goal of having these levels of control is to allow fully automated control of a plant from a remote site with scheduling and minimize the need for operators at the plant full time. The existing system needs to be assessed to verify it can meet these minimal criteria.

Table 2: Typical parameters necessary to implement automated control

Control Action	Inputs	Outputs
Unit Start/Stop	Gate limit Gate position Breaker status Governor hydraulics Unit speed Unit protective relays Generator voltage	Brake release Gate operator Cooling water valve Exciter Start circuit Unit selection Breaker trip/close
Unit synchronizing	Unit speed Gate position Gate limit Breaker status Generator voltage Bus voltage	Breaker select Breaker closing Unit select Speed adjust Voltage adjust
AGC	Unit status MW MVar Unit protective relays Set point	Unit selection Power adjust
Synchronous condensing	Draft tube depression MW MVar	Power adjust Excitation Draft tube depression Unit selection
Turbine optimization	Head Blade angle Gate position MW	Gate operator Power adjust Unit selection
Trash rack control	Differential pressure	Trash raking system Power adjust Gate operator
Black start	Protective relays Bus voltages Generator status Breaker status Generator voltage Unit power	Generator start Unit synchronizing Breaker close (dead bus) Power adjust Voltage regulator Unit selection Breaker selection

Control Action	Inputs	Outputs
Base load control	Unit status MW MVar Gate position Gate limit Set point	Power adjust Gate operator Unit selection
Voltage control (AVC)	Unit status Breaker status MW MVar Bus voltage Set point Generator voltage	Voltage regulator Unit selection
Remedial action schemes	RAS initiation Generator selection Breaker status Unit status System frequency	Breaker trip Breaker selection
Forebay selective withdrawal	Water temperatures Gate position	Gate operator Unit select

Alarming

Audits, performed by the authors of this section, of hydroelectric control systems have found many installations with minimal alarming, or the alarming was initially configured but never optimized. Operators routinely ignored alarms and, as a result, missed critical information. Frequently, numerous alarms are presented to an operator when a single event occurs. Many of these alarms are excessive and may lead the operator to an incorrect action. These secondary alarms should be grouped into a single alarm, to a primary cause or inhibited based on the primary alarm. The existing alarming system needs to be assessed to see how it compares to the criteria in Table 3.

Controls studies have determined that the optimum number of actionable alarms that an operator can properly handle is 6-8 per hour [6 and 8]. Where alarms exceed this threshold, the alarming configuration or the operations of the system itself should be studied and corrected during engineering and operations. Alarms that require no action on the part of the operators should be investigated for removal from the system or placed automatically into a historical archive for reference only to free the operator. Table 3 lists reasonable goals for alarm systems.

Discrete devices, such as pressure switches, temperature switches, proximity switches, device statuses etc. should all be installed in a fail-safe manner. A failed device or an alarm state of the device will trigger an alarm. This is a fail-safe design. Where there are multiple discrete devices monitoring a single system, such as turbine vibration, the switches are recommended to be wired to different I/O cards. Just be mindful of not putting all critical measurements on one I/O card. If the I/O card fails, important information protecting the process can be compromised. Check the quality and type of discrete I/O of the existing system. In some older facilities, the quality of the wiring may need to be assessed. Older wiring may have cracked or even missing insulation.

Historical Data

Historical data is vital to troubleshooting and optimizing a control system. There are basically two types of historical trending. The first type is the near real-time trending, continuously displayed trend used by operators going back a few hours or minutes of a process and up to near real-time. The second type of trending is for long-term archiving. Audits of control systems have discovered the historical trending that was never archived or improperly configured, and/or the historical files were too short of duration to be of usefulness in troubleshooting or for optimizing. Assess the current ability to create long term trends and be able to export to a database for analysis.

All alarms should be trended and archived. Historical archiving of discrete points is recorded on an exception basis. Analog points should be archived based on common sense in terms of the deadband and frequency of data collecting. A slow-moving temperature measurement may only need to be collected every 5 seconds. A fast analog, such as flow or pressure, may be collected every second or even faster if the I/O is capable of scanning at high speeds (> 250 ms). The deadband of analog measurements to an archive is often set at 0.25% to 0.5%, which is the accuracy of most analog measurements. Audits of archives found analogs set at 2% or at even higher deadbands. This can lead to aliasing and mislead an investigator in analyzing events. Current historical archiving software is capable of data compression without significant loss of data. The cost of recording media has become minor.

Older analog inputs channels are frequently 12 bit. That is 0.25% accuracy for the full scale (1 bit out of 4095 total bits). The system may not be capable of obtaining a desired accuracy from the analog I/O. The transmitter accuracy compounds the situation. Assess the analog input and output capability of the system. It should be at an absolute minimum of 13 bit accuracy with a preferred accuracy of 15 bits (or more). The accuracy of the measurement is an important factor in historical archiving, interpreting the data and controlling the process.

In modeling and optimizing generator performance, historical archiving for several years is required. Seasonal variations and overall control of the generator and dam performance can only be audited and improved using long term data.

Table 3: ISA 18-2 Alarm Performance Metrics [6]

Alarm Performance Metrics Based upon at least 30 days of data		
Metric	**Target Value**	
Annunciated Alarms per Time:	Target Value: Very Likely to be Acceptable	Target Value: Maximum Manageable
Annunciated Alarms Per Day per Operating Position	~150 alarms per day	~300 alarms per day
Annunciated Alarms Per Hour per Operating Position	~6 (average)	~12 (average)
Annunciated Alarms Per 10 Minutes per Operating Position	~1 (average)	~2 (average)
Metric	**Target Value**	
Percentage of hours containing more than 30 alarms	~<1%	
Percentage of 10-minute periods containing more than 10 alarms	~<1%	
Maximum number of alarms in a 10 minute period	≤10	
Percentage of time the alarm system is in a flood condition	~<1%	
Percentage contribution of the top 10 most frequent alarms to the overall alarm load	~<1% to 5% maximum, with action plans to address deficiencies.	
Quantity of chattering and fleeting alarms	Zero, action plans to correct any that occur.	
Stale Alarms	Less than 5 present on any day, with action plans to address	
Annunciated Priority Distribution	3 priorities: ~80% Low, ~15% Medium, ~5% High or 4 priorities: ~80% Low, ~15% Medium, ~5% High, ~<1% "highest" Other special-purpose priorities excluded from the calculation	
Unauthorized Alarm Suppression	Zero alarms suppressed outside of controlled or approved methodologies	
Unauthorized Alarm Attribute Changes	Zero alarm attribute changes outside of approved methodologies or MOC	

3.2 Operations

<u>HMI - Human Machine Interface</u>

The HMI is more than just a rehash of a P&ID (piping and instrumentation design drawing) with process descriptions. The software helps the operator in routine process management and optimization. The largest improvement in the HMI for operations has been in helping the operator respond to alarms. In the last few years emphasis has been placed in developing HMIs to assist the operator in abnormal situation management, which has been developed in a consortium with Honeywell [8]. The findings of this group have led to a radical graphical design change for operators. The normal color

conditions for a process are gray and the background is gray. Abnormal conditions change color based on the processes. Information such as efficiencies or key performance indicators often prompt the operator long before a serious alarm condition occurs. This group concludes that operators respond 40% faster to alarms than traditional displays with multiple colors and are less likely to make mistakes in responding to alarms.

Optimization – Various Methods

Below are the minimum control capabilities in an operating system.

- Most Efficient Load (MEL)

  This control mode will give the majority of efficiency benefits. The automation system will look at all the variables affecting unit efficiency, compare them to optimum, and automatically adjust the unit to achieve the highest possible efficiency for the operating conditions available. The system will continuously monitor all the parameters and, if any changes occur, it will automatically make necessary adjustments to again maintain maximum efficiency.

- Maximum Sustainable Load (MSL)

  While this mode is not the most efficient, there are times, when the unit must be operated at maximum MW output due to other power system constraints.

- Fixed Turbine Flow

  Occasionally there is a requirement to operate a plant at a fixed flow rate for periods of time. If there is only one unit at that plant, there is little opportunity during these periods to optimize efficiency. However, if there are multiple units at that plant, the automation system can match the individual unit efficiencies in such a way as to maximize the total flow requirement for the plant.

- Headwater / Tailwater Elevation Control

  Occasionally there is a requirement to operate a plant such that a particular Headwater or Tailwater elevation is achieved. Just like the fixed turbine flow mode there is little opportunity to optimize efficiency if there is only one unit. But, as long as several units are available the automation system can match the individual unit efficiencies to maximize plant efficiency while maintaining the water elevations.

- Load Following / Automatic Generation Control

  AGC is a topic which has caused much debate over the years among hydro utilities. The power system operators want to utilize hydro units for AGC due to the rapid response of the hydro units. Plant operation personnel tend to discourage that practice due to the belief that it causes increased maintenance requirements and reduced efficiency. Assuming that AGC is a requirement for

the plant being automated, the automation system can take the load set point supplied by the power system and calculate the most efficient loading of the individual units and still achieve the required AGC needs.

- Condensing / Reactive Power Control

  Although there is no unit efficiency issue, since no water is used in condensing mode, it is still an operating mode that must be considered in the software design as many units are operated this way for system voltage stability. In condensing mode, the turbine gates are closed and depending on the design of the unit, water is either naturally evacuated or a system of air compressors forces the water below the turbine blades. The unit is then operated as a synchronous condenser to supply reactive power to the power system for voltage control.

- Automatic Load Reduction and Reinstatement for Temperature Considerations

  High temperature conditions for plant equipment are one of the fundamental issues that must be addressed. By supplying temperature sensors from plant equipment into the automation system, the system can monitor and trend those temperatures to ensure all components stay within their safe limits. One feature the automation system can accomplish is to allow the individual components to operate close to limits, but then if a temperature limit is reached, reduce loading to allow the temperature to stabilize at safe levels. Then as conditions change, which affect the cooling of that component, the automation system can automatically increase the load back to the desired level. Temperature sensors are almost always included in the generators, unit transformers, and critical bearings. Others critical to unit operation should be included as available.

<u>Sequence of Events and First Out</u>

First out information should always be historically archived. This is critical information for operations and troubleshooting. The first out information for trending originates from the controller, not from comparing times of discrete alarms in the historical archive. Historical archiving software is usually not fast enough to analyze events that may take place for high-speed trips. First out alarming in high-speed applications, such as turbine control, is configured in the control system. These discrete inputs are most commonly scanned at 1 ms or faster. Standard discrete I/O is not normally scanned at this frequency.

The main controller should have a time sync program with a GPS clock. This accurate time should be shared in all the controllers and HMIs.

The control system software frequently has prebuilt SOE (sequence of events) blocks or first out blocks that capture the event that caused a system to trip or fail. This captured event is then historically trended and displayed to the operator for a quick analysis as to what just happened. A turbine can trip off line for many reasons. A high vibration trip will be programmed in a first out block along with temperatures, speeds, power, operator action etc. If a trip is caused by high vibration, it will be the trapped event in the first out

block and displayed to the operator. The operator will be able to quickly comprehend the cause of the trip and take appropriate action. A restart of the tripped turbine will automatically reset the first out block and be ready to capture the next trip.

An alternate way of capturing first out events is to wire to an SOE device or high speed I/O card in parallel to the normal control I/O. The software in the controller (not the historical archiving software) will capture the individual times of each alarm. The actual time of the alarm will traditionally be in the message portion of the alarm and not the time the alarm appears in the archive. The operator will be required to look at all messages of the alarms in the alarm archive and search for the time of the first event that caused the trip. This is a common setup in systems that have evolved over the years and in older control systems that are still in service.

3.3 Maintenance

Backing Up Systems – Disaster Recovery Plans

A disaster recovery plan is essential and must be part of a control system design. A disaster can occur from a fire, corrupt data, failed systems, poor configuration with a download or even sabotage. There should be a least two backup copies. On a scheduled basis (monthly or quarterly, depending on how frequently changes are made to the system) a backup copy should be made that is stored in a secure location offsite. There are companies that provide this as a commercial service to IT departments. Primary backups should be made after any change. Commercial software archiving programs are available to store backups. Images of PC based systems on a frequent scheduled basis are also recommended. Historical data should have a backup system as well. A plan for making backups should be made then adhered to.

It is critical to test a recovery system. There are numerous stories of backup systems that were found to be ineffective. In some cases the backup tapes or disks were found to be blank or the backup copies were corrupt.

Also, refer to NERC-CIP-009 “Recovery Plans for Critical Cyber Assets”

Patches and Software Updates or Changes

The NERC CIP-007-3 standard stresses the need to test modifications before installing the changes in the field. This is to minimize adverse effects on the production system or its operation. This includes verifying that no changes impact cyber security. Common practice to date has been to make changes in a control system without first testing on a bench or test system. The engineer or programmer has previously assumed no serious error or complications will occur with a change. This recommended practice of testing, even for a non-NERC site, will reduce errors in operations and create increased confidence from operators and management in the quality of process control software changes. In practice, the authors of this article have found the amount of time to test is quite minimal and has little impact on perceived productivity of the programmer when the time required to correct errors in the field with untested changes are taken into account.

Vendor patches, such as Microsoft, Siemens, Emerson, Honeywell etc, should be tested in a lab environment before field installation. Some vendors will test their software/hardware with recent patches and inform customers of the safe installation of the patches.

Documentation

NERC CIP-003-3 standard outlines rigorous documentation requirements. All changes to a control system need to be documented in a systematic manner.

Secure Passwords

All default passwords and/or administrative logins without passwords must be eliminated. All administrative passwords must be kept secure. The passwords should be 'strong'. An ideal password is long (8 characters or more) and includes letters, punctuation, symbols, and numbers. It is permissible to write down passwords as it is difficult to memorize strong passwords. These written passwords should be stored in a secure place. These documents containing the passwords must be kept in a secure location. Refer also to NERC CIP-007-3 section 5.3.

Predictive Maintenance Software – Condition Monitoring

Condition monitoring measures the health of an asset through monitoring and analysis of data. Common data monitoring points are vibration, temperature, wear, corrosion, pressure, proximity and flow. Newer instrumentation, such as a HART™ enabled digital control valve positioner, has digital feedback information to monitor hysteresis, valve stiction, and instrument air pressure. Data is monitored in real time to alert operations to potential problems. Packages are available to predict required maintenance using these data points. Maintenance is performed only when required.

From Hydro World Vol. 19 Issue 3: "Most of the 1,560 MW of hydropower plants in Japan are unmanned. Operations and maintenance of these plants are handled using a wide-area maintenance system, in which one office manages multiple facilities. Unmanned plants are equipped with remote monitoring systems that continuously record data from various devices, such as tailrace level, turbine discharge, and generator vibration. Condition-based maintenance is used…

Extending the periodic inspection and overhaul cycles makes it possible to reduce the number of maintenance staff. Reducing the number of man-hours worked by engineers will enable their centralization to hydro plants and their allocation to maintenance with DEDE and other organizations. An estimated 2,025 man-hours can be saved by reducing the cycle of periodic inspections and overhauls. For example, before the demonstration, 2,130 man-hours were required for periodic inspection; this was reduced to 1,485 man-hours. For overhaul, 3,600 man-hours were required; this was reduced to 2,400 man-hours."

4.0 Metrics, Monitoring and Analysis

Various plant functions are required to be operated quickly and predictably in response to changes in process variables or operator commands. Failure of the control system to execute a programmed response within a specific time frame will result in operator frustration and dissatisfaction and may jeopardize the safety of personnel and equipment. To ensure that the control system responds in a manner commensurate with the expectations of plant operations, the real-time ability of the control system should be defined in terms of the minimum time that it takes to process field events and operator-entered and program-generated commands.

Controls system response times are typically specified at the plant level. This excludes the interface with offsite control centers. The response times for offsite control will vary depending on the type and speed of the interconnecting communications link. In those situations, where the response time from offsite control centers is critical, it is necessary that the communications system be designed for secure, high-speed transmission with the plant control system.

The response time of the control system will depend on the system loading at the time of the event or control action as defined by its CPU and network load rate.

The CPU load rate is typically computed as a percentage of CPU capacity for "normal" and "worst case" system loading scenarios. A normal operating scenario is defined to be one where all field values are being updated at the required periodicity, a minimum number of active windows are open at the operator interface, communications are in normal configuration, application programs are in operation, and normal plant start/stop operations are being undertaken. A "worst case" scenario is typically a case where there are multiple unit trips in a short period of time. Such a condition has the effect of increasing the number of I/O (either field devices or operator-generated commands) that are simultaneously changing state.

Typical CPU load rates for normal operating scenarios are in the range of 40-60%. Some controllers set a percentage of CPU for logic and another percentage for communications. For worst-case loading scenarios, the CPU load rate will typically vary between 50-75% total. The network load (TCP/IP) should be less than 30% in the worst case scenario.

The time interval between the moments that a command is issued at the operator interface to the time the feedback (such as motor status) is displayed at the HMI should not exceed 1-2 seconds.

The time interval between the moments that a command has been issued at the operator interface to the time that the command is transmitted to the field device should be under 1 second. Ideally, discrete commands should be transmitted to the device in less than 200ms. The majority of I/O device drivers place a priority on write commands (write commands or operator inputs will normally execute before read commands) so that there is a quick response in the field to an operator screen input.

The time interval between the moments that a status change occurs at an input at the control system I/O to the time that the status change is displayed at one of the operator interfaces, should not exceed 1-2 seconds.

Update times to the system-wide database should be less than 1 second and typically range from 100 to 500 ms, depending on the type of I/O (digital input, analog input, or accumulator) and system loading.

Intrusion detection has historically been strictly an IT (information technology) function. This is falling upon process control engineers now. Intrusion detection logs should be automated and inspected by the process control engineer and IT. There should be no successful intrusion attempts.

Syslogs and firewall logs have also been an IT only function. Process control engineers should review these on a periodic basis.

Actionable alarms should not exceed 10 per hour. Ideally these alarms should not exceed 6 per hour per operator.

5.0 Information Sources:

Baseline Knowledge:

1. IEEE Std. 1249:1996, *IEEE Guide for Computer Based Control for Hydroelectric Power Plant Automation.*

2. IEEE Std. 1249:2010 working copy, *IEEE Guide for Computer Based Control for Hydroelectric Power Plant Automation.*

3. FISMA (NIST 800-53), *Recommended Security Controls for Federal Information Systems and Organizations*, NIST Special Publication 800-53.

   The FISMA Implementation Project was established in January 2003 to produce several key security standards and guidelines required by the FISMA legislation. As a key element of the FISMA Implementation Project, NIST also developed additional guidance (in the form of Special Publications) and a Risk Management Framework which effectively integrates all of NIST's FISMA-related security standards and guidelines in order to promote the development of comprehensive, risk-based, and balanced information security programs by federal agencies. The Risk Management Framework and the associated publications are available at: http://csrc.nist.gov/publications/PubsSPs.html.

   The National Institute of Standards and Technology (NIST) 800-53 provides recommended security controls of federal information systems and is used to determine the baseline security controls for the system. Federal IT systems must adhere to these security guidelines to comply with FISMA. The section that pertains to hydroelectric control systems is in appendix I of NIST 800-53.

4. United States Computer Emergency Readiness Team

   The continuously updated site: http://www.uscert.gov/control_systems/

   The goal of the DHS National Cyber Security Division's CSSP is to reduce industrial control system risks within and across all critical infrastructure and key resource sectors by coordinating efforts among federal, state, local, and tribal governments, as well as industrial control systems owners, operators and vendors. The CSSP coordinates activities to reduce the likelihood of success and severity of impact of a cyber attack against critical infrastructure control systems through risk-mitigation activities.

5. National Communications System, *Supervisory Control and Data Acquisition (SCADA) Systems*, NCS Technical Information Bulletin 04-1, Oct. 2004. http://www.ncs.gov/library/tech_bulletins/2004/tib_04-1.pdf

6. *Hydro Life Extension Modernization Guide, Volume 7 – Protection and Control*, EPRI, Palo Alto, CA: 2000. TR-112350-V7.

State of the Art:

7. ANSI/ISA ISA 18.00.02-2009 "*Management of Alarm Systems for the Process Industries*".

8. Juniper Networks, http://www.juniper.net/us/en/local/pdf/whitepapers/2000276-en.pdf, 2010

9. ASM Consortium, See http://www.asmconsortium.net. Refer also this white paper: http://www.asmconsortium.net/Documents/OpInterfaceReqts_GoBeyond_Jan09.pdf National Institute of Standards and Technology's (NIST) Advanced Technology Program assisted in funding this technology.

10. Hydro World Vol. 19 Issue 3

11. *CERN: Large Hadron Collider Project*, Power Point Presentation, http://machine-interlocks.web.cern.ch/machine-interlocks/Presentations/PIC/Powering%20Interlocks%20Reliability_from_MZS.ppt

12. Power Engineering, *Upgraded SCADA System Gives Hydro Plant Greater Reliability and Room to Grow*, http://www.power-eng.com/articles/print/volume-103/issue-10/features/upgraded-scada-system-gives-hydro-plant-greater-reliability-and-room-to-grow.html, 1999

Standards:

13. IEEE Std 1010:2006, IEEE Guide for Control of Hydroelectric Power Plants

14. National Electric Reliability Council NERC-CIP 002-009 Summary http://www.nerc.com/

15. CIP-002-3 "Critical Cyber Asset Identification"

16. Standard CIP-002 requires the identification and documentation of the Critical Cyber Assets associated with the Critical Assets that support the reliable operation of the Bulk Electric System. These Critical Assets are to be identified through the application of a risk-based assessment.

17. CIP-003-3 "Security Management Controls"

18. Standard CIP-003 requires that Responsible Entities have minimum security management controls in place to protect Critical Cyber Assets.

19. CIP-004-3 "Personnel and Training"

20. Standard CIP-004 requires that personnel having authorized cyber or authorized unescorted physical access to Critical Cyber Assets, including contractors and service vendors, have an appropriate level of personnel risk assessment, training, and security awareness.

21. CIP-005-3 "Electronic Security Perimeters"

22. Standard CIP-005 requires the identification and protection of the Electronic Security Perimeter(s) inside which all Critical Cyber Assets reside, as well as all access points on the perimeter. All access points to the control system need to be documented. It is common for vendor or remote maintenance dial up access to be tied to a hydro control system. These should be eliminated whether a facility is under NERC or not. Access should be secured through firewalls and the use of VPNs. All access should be logged.

23. CIP-006-3 "Physical Security of Critical Cyber Assets"

24. Standard CIP-006 is intended to ensure the implementation of a physical security program for the protection of Critical Cyber Assets.

25. CIP-007-3 "Systems Security Management"

26. Standard CIP-007 requires Responsible Entities to define methods, processes, and procedures for securing those systems determined to be Critical Cyber Assets, as well as others (non-critical) Cyber Assets within the Electronic Security Perimeter(s).

27. CIP-008-3 "Incident Reporting and Response Planning"

28. Standard CIP-008-3 ensures the identification, classification, response, and reporting of Cyber Security Incidents related to Critical Cyber Assets.

29. CIP-009-3 "Recovery Plans for Critical Cyber Assets"

30. Standard CIP-009 ensures that recovery plan(s) are put in place for Critical Cyber Assets and that these plans follow established business continuity and disaster recovery

31. FISMA (NIST 800-82), Industrial Control System Security, NIST Special Publication 800-82, http://csrc.nist.gov/groups/SMA/fisma/ics/documents/oct23-2009-workshop/nist-ics3_10-23-2009.pdf

It should be noted by the user that this document is intended only as a guide. Statements are of a general nature and therefore do not take into account special situations that can differ significantly from those discussed in this document.

Best Practice Catalog

Machine Condition Monitoring

Revision 2.0, 08/20/2012

1.0 Scope and Purpose

Condition monitoring of hydroelectric power generating units is essential to protect against sudden failure. Fault development can occur very quickly. Many hydro units are located in remote areas making regular inspection difficult. They are required to have a monitoring system that continuously checks machine condition, remotely indicates the onset of a fault, and provides the possibility of preventative automatic shutdown.

Hydroelectric turbine-generators are subject to forces and operating conditions unique to their operation and configuration. They typically operate at low rotational speeds. Their physical mass and slow rotational speeds give rise to large vibration amplitudes and low vibration frequencies. This requires a monitoring system with special low frequency response capabilities.

1.1 Hydropower Taxonomy Position

Hydropower Facility → Powerhouse → Instrument and Controls → I&C for Condition Monitoring

1.1.1 Condition Monitoring Transducers and Measurements

Performance and reliability related components are primarily centered on the turbine and generator. The primary components are proximity probes (used for vibration and air gap), temperature probes, speed indication, and partial discharge analysis.

A high level of monitoring and diagnostic analysis is available using software that monitors the probes and can react immediately to serious faults and also warn on slowly developing system anomalies which may require maintenance at some time in the future. These slow developing anomalies, such as a breakdown in stator insulation, can be diagnosed with expert systems and a technical condition management system. A proactive maintenance system will include a larger number of probes, flow meters, partial discharge analysis, and other possible instrumentation as opposed to a simple system that trips a unit from only high vibration or high temperature.

Eddy current transducers (proximity probes) are the choice for vibration transducers and monitoring. Eddy current transducers are the only transducers that provide shaft relative (relative to the bearing) vibration measurement. "Relative and absolute shaft vibration measurements are carried out on hydraulic machine sets using non-contacting transducers. Shaft-riding probes with seismic transducers cannot generally be used due to the very low frequency range of the measuring equipment required for low-speed hydraulic machinery. For relative measurements, transducers should be mounted directly on the bearing shell or the bearing pad. If the transducers are installed on the bearing support structure or bearing housing, as is common for vertical machines, care shall be taken that the relative motion between the bearing shell or pad and the transducer itself is small compared with the shaft motion [11]."

Several methods are usually available for the installation of eddy current transducers, including internal, internal/external, and external mounting. Before selecting the appropriate method of mounting, special consideration needs to be given to several important aspects of installation that will determine the success of monitoring.

Eddy current transducers work on the proximity theory of operation. An eddy current system consists of a matched component system which includes a probe, an extension cable, and an oscillator/demodulator. A high frequency RF (radio frequency) signal is generated by the oscillator/demodulator, sent through the extension cable, and radiated from the probe tip. Eddy currents are generated in the surface of the shaft. The oscillator/demodulator demodulates the signal and provides a modulated DC voltage where the DC portion is directly proportional to gap (distance) and the AC portion is directly proportional to vibration. In this way, an eddy current transducer can be used for both radial vibration and distance measurements such as thrust position and shaft position [2].

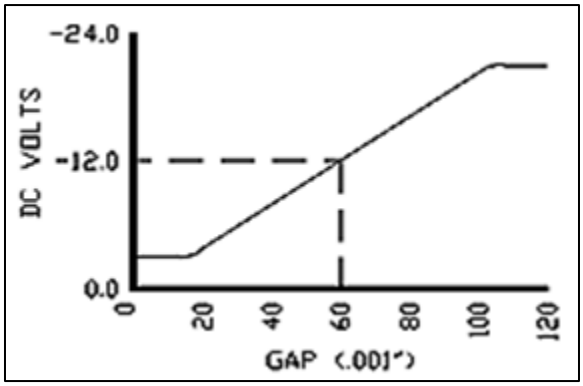

Figure 1: Typical Eddy Current Transducer Curve

- Guide Bearing Vibration Probe (Seismic Transducer): By measuring vibration at the generator and turbine guide bearings, various sources of unbalance, shear pin failure, bearing problems, and wicket gate problems can be determined [1].

- Gap: Gap indicates the distance between the probe tip and the shaft. It is determined by filtering out the dynamic signal (AC portion of the waveform) and looking only at the DC portion of the waveform. This is shown in Figure 1.

- Air Gap Magnetic Flux Transducer: This is normally a single-axis magnetic field to analog voltage transducer for magnetic field measurement and provides diagnostic information of generator magnetic fields and shorted pole coils.

- Thrust Bearing Oil Film Thickness: Large vertical hydro units can weigh over 1,000 tons with the unit's entire weight carried by the thrust bearing. An absence or reduction in oil film thickness at the thrust pads results in the rapid breakdown of the

bearing babbit which can lead to further rotor/bearing damage if the oil film is not corrected. On hydro units, the thrust bearing shoes are fitted with proximity probes which observe the thrust collar and provide a measurement of oil film thickness. Frequently thrust bearing oil thickness is accomplished by the rotor vertical position measurement.

- Guide Bearing Temperatures: Bearing temperature can indicate problems related to fluid-film bearings, including overload, bearing fatigue, or insufficient lubrication. One RTD (resistance temperature device) or thermocouple sensor is installed per bearing pad.

- Thrust Bearing Temperatures: Bearing temperature can indicate problems related to fluid-film bearings, including overload, bearing fatigue, or insufficient lubrication. One RTD or thermocouple sensor is installed per bearing pad.

- Keyphasor® Signal (*Trademark Bently-Nevada*): A proximity probe observing a once-per-turn notch or protrusion (such as a key or keyway) on the machine's shaft which provides a precise reference signal used for indicating rotational speed, filtering vibration to multiples of running speed (such as 1X, NOT 1X, and NX – see definitions below), providing vibration phase information, and allowing air gap profile data and air gap magnetic flux. The proximity transducer is generally mounted near the upper guide bearing. The shaft's notch or projection should align with an established reference on the rotor such as the generator's #1 pole.

- 1X Amplitude and Phase: This is a measurement of the vibration that is synchronous with rotor speed (1X). A tracking filter with a Q equals 18 (see Figure 2) is used to attenuate all other components. This measurement is valid at speeds between 25 rpm and 1500 rpm which are applicable for most hydro-turbines. This measurement is used to determine acceptance regions and provide data for detecting forced vibrations that may be introduced by bearing wear, unbalance, wicket gate damage, blade damage, generator faults, debris passing through the machine, and other conditions. An amplitude and/or phase change can be indicative of the above conditions [4].

- NOT 1X: This is an overall vibration measurement with the 1X component attenuated. This is a measurement of all vibration components except those occurring at shaft rotation speed. This measurement uses a tracking filter with a Q of 18 to attenuate the 1X component. With the 1X signal attenuated, which is usually the predominant component in hydro-turbines, the remaining signal will be the sub-synchronous vibration due to rough zone conditions and/or super-synchronous vibration. Therefore, the NOT 1X is the primary measurement used for rough zone vibration. Fluid instabilities occur during partial loads and running closer or below the minimum operating level of the turbine. The operating range, where fluid instabilities occur, is considered to be in the rough zone.

  In addition to alarm set-points, an option can be implemented on the NOT 1X measurement for enabling or disabling a trip. This may be used to prevent other alarming while the hydro-turbine passes through the rough zone. Alarm delays may also be set to allow time for the hydro-turbine to pass through this zone [4].

- NX (Amplitude and Phase): This is a measurement of the vibration that is an integer multiple (NX) of the rotor speed. A tracking filter with a Q of 18 is used to attenuate all other components. "N" may be configured to an integer value selected by the operator. Typically, this is used to detect guide vane blockage or shear pin failure, but it may be used for detection of other faults that will cause super-synchronous vibrations. One major cause of super-synchronous vibration is reduced water flow through a wicket gate. This will cause a low-pressure region, and each time a blade or bucket passes through it, an impulse is felt on the rotor causing a super-synchronous vibration equal to the number of blades. The NX measurements are additionally useful for condition management of Kaplan and Pelton turbines. Setting "N" equal to the number of blades will cause the NX amplitude and phase to be detected [4].

- Composite – Gap and NX: The composite measurement combines the gap and NX amplitude to provide a means for detecting and alarming on shear pin failure or other types of conditions that change the flow of water through a wicket gate. In addition to the NX vibration caused by the newly created low-pressure region, the shaft position will also move toward the low-pressure area. The gap measurement will detect the change in shaft position. Composite is simply the NX amplitude multiplied by the percent-change in the gap. These two major indicators of shear pin failure are combined into one convenient measurement to provide extra machine protection [4].

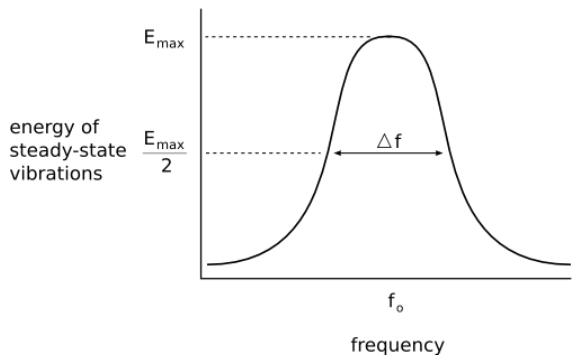

The bandwidth, Δf, of a damped oscillator is shown on a graph of energy versus frequency. The Q factor of the damped oscillator, or filter, is $f_0/\Delta f$. The higher the Q, the narrower and 'sharper' the peak is. Q= $f_0/\Delta f$. In other words, Q is a filter's center frequency divided by its bandwidth and is a measure of how narrowly the filter can pass the desired frequency and attenuate all other frequencies

Figure 2: Definition of Q

- Draft Tube Vibration: Certain operating conditions can give rise to cavitation, an implosion of vapor cavities in the liquid. Cavitation can damage the turbine, erode metal, affect efficiency, and eventually force a shutdown. Cavitation is measured with an accelerometer mounted on the draft tube. By monitoring for draft tube vibration with an accelerometer and filtering appropriately, cavitation can be detected and conditions can be adjusted to avoid operating the unit in this damaging region.

- Runner Cover Vibration: This vibration measurement is helpful in measuring the quality of the sealing system. This vibration can also inform about rotor vertical vibrations due to change of pressure between the upper part of the runner and runner cover.

- Stator Frame Vibration: Vibration of the stator core and frame can cause fretting and damage to the winding insulation. Uneven air gaps can also cause the stator core to vibrate. Low-frequency seismic transducers are mounted on the outer diameter of the stator core and frame. By mounting an appropriate seismic vibration transducer on the stator core and frame, such problems can be detected before serious damage occurs.

- Generator Temperatures: Temperature sensors are installed in locations such as in stator slots, air cooler inlet and outlet, water inlet and outlet, etc., providing important information on stator condition. The system provides alarms and alerts operators when temperatures are outside of acceptable limits. [1]

- Cooling Water Flow and Cooling Water Temperature: Cooling water flow may be an interlock and/or a permissive on some systems. Cooling water temperature tends to be informational only as it varies with ambient conditions. The quantity of cooling water flow, above the interlock minimum, is a minor variable in condition monitoring. This flow measurement is normally an analog device such as a magnetic flow meter or an orifice plate with a differential pressure measurement converted to flow.

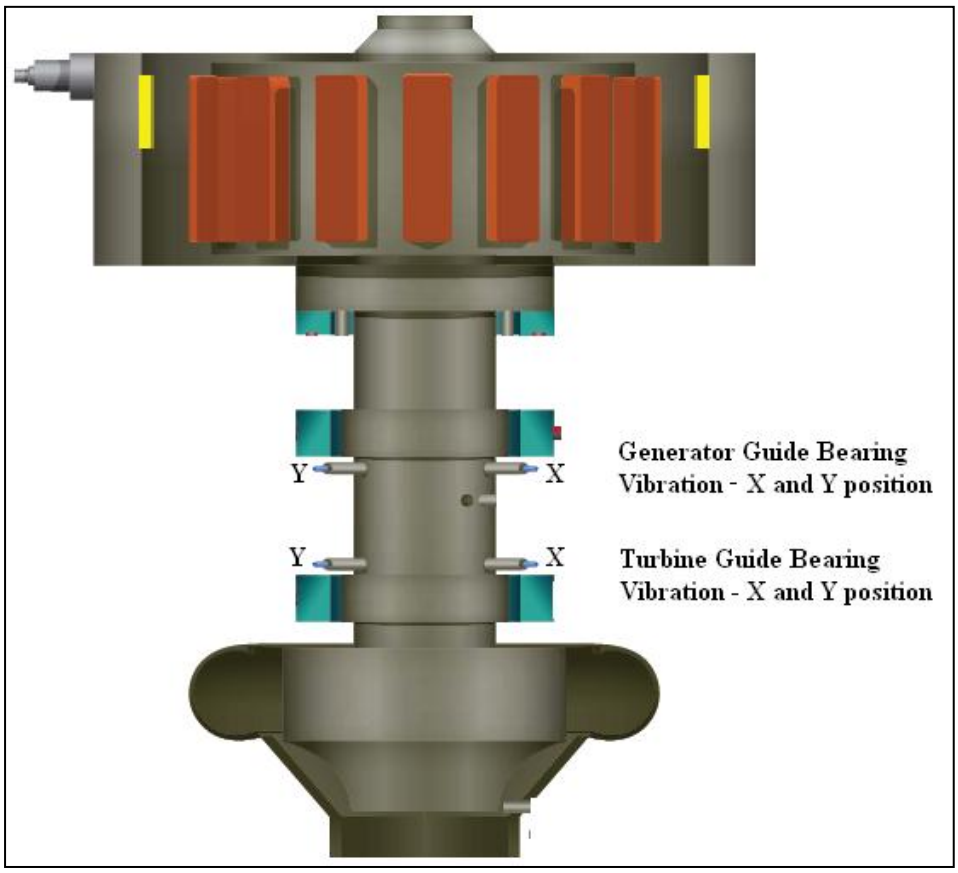

Figure 3: Showing both Turbine and Generator Vibration XY Probes [8]

Radial vibration and position probes are typically located at each bearing in "XY" pairs. The probes in each XY pair are mounted 90° to each other, thus giving a complete view of shaft radial vibration and position at the probe pair location. The bearing vibration probes measure rotor vibration.

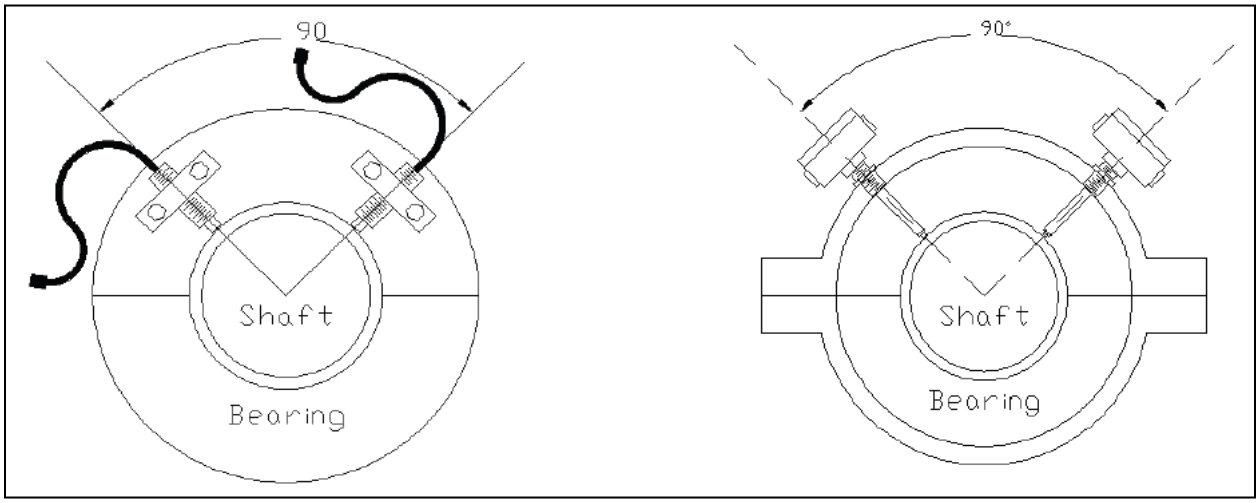

Figure 4: Showing X and Y Probes with Internal or External Mounting [2]

Radial vibration measures the basic dynamic motion (vibration) that is perpendicular, i.e. radial, to the axis of the shaft. The amplitude of radial vibration indicates how "rough or smooth" the machine is running. On critical plant rotating machinery with proximity probes, radial vibration is expressed in units of mils (thousandths of an inch) peak-to-peak displacement.

Radial position provides information about the average position of the shaft within the bearing clearance. Fluid-film bearings, whether sleeve or tilting pad, have clearances between the shaft and bearing which permits the shaft to ride at different positions within the clearance. The average position is a primary indicator of proper machine alignment and bearing loading both of which are key to managing vibration to acceptable levels.

The Keyphasor® probe provides the timing marker required to measure the phase angle of vibration. Accurate phase angle is necessary for in-situ rotor balancing and is extremely important for analysis of machinery malfunctions as well as magnetic flux measurement.

1.2 Summary of Best Practices

Best practices for machine condition monitoring can have a significant impact on plant efficiency and generation. A condition monitoring system can predict a pending failure and avoid machine stressors, detect deterioration earlier, reduce the length and frequency of outages, provide root cause analysis, and improve availability and overall efficiency. The system can be used as a predictive maintenance tool to reduce unplanned outages. The system can be used as a standalone condition monitoring and analysis system or it can be integrated with the plant's automatic control system.

1.3 Best Practice Cross-references

- I&C - Automation
- Mechanical - Lubrication System
- Electrical - Generator
- Mechanical – Governor
- Mechanical – Raw Water System

2.0 Technology Design Summary

2.1 Technological Evolution and Design Technology

Vibration analysis was typically performed by a mechanic or the operator by observing a dial indicator. This is still the only method in older facilities. Recent developments in vibration sensor, data acquisition, and analysis technologies, however, are making vibration analysis cheaper, easier, and more widely available.

Air gap and vibration data is now being incorporated into model-based diagnostics. Models create virtual sensors where physical sensors are not able to be installed. An example is where real data from physical sensors mounted on the bearings at the shaft ends is used to create a virtual sensor for mid-span vibration.

Detailed analysis is now available in near real time for stator insulation failure, stator grounding issues, and stator vibration. These problems were previously only determined by expensive shutdowns and testing when the unit was disabled. Even when the unit is down, it can be very difficult to identify stator problems. The testing is expensive and time consuming. Partial discharge measurements are used exclusively to identify problems with stator insulation. Measuring magnetic flux to uncover a non-uniform magnetic field during rotor rotation between the rotor and stator is becoming more common. The flux transducer is usually connected to the stator.

2.2 State of the Art Technology

State of the art cannot be discussed without mentioning the hardware required. Having all the sensors mounted, as listed below, and tied to a supervisory system that has model-based software, is the state of the art.

State of the art turbine measurements (See Figure 5):

- 2-axis guide bearing vibration
- Guide bearing temperature
- Guide bearing housing seismic
- Draft tube vibration (may include head cover vibration)
- Rotational speed
- Seal ring position/blade clearance
- Cooling water flow

- Wicket gate position

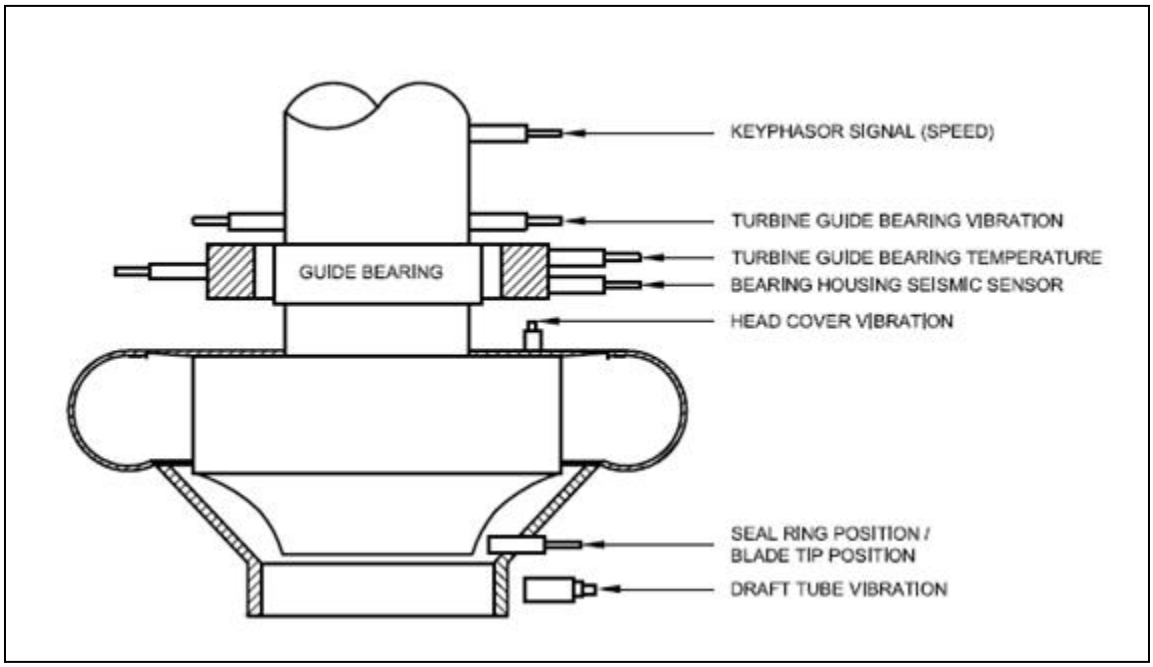

Figure 5: Turbine Measurements [1]

State of the art generator measurements (see Figure 6):

- Air gap
- 2- axis guide bearing vibration
- Guide bearing temperatures
- Thrust bearing oil film thickness
- End winding vibration
- Core vibration
- Stator frame vibration
- Thrust bearing pad temperature
- Generator winding temperatures
- Magnetic flux or partial discharge probes (various types)
- Cooling water flow

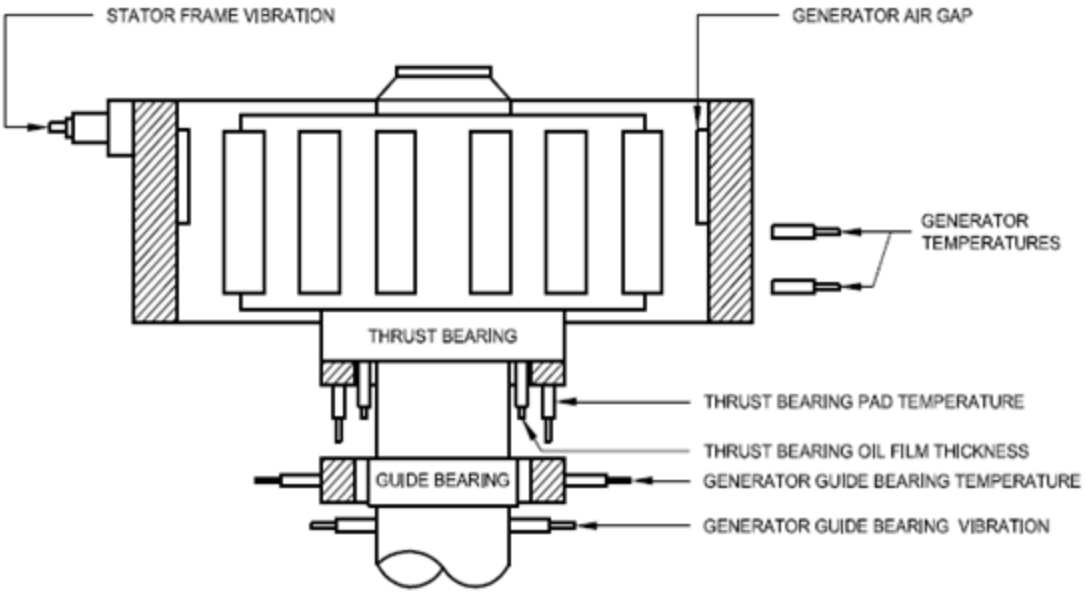

Figure 6: Generator Measurements [1]

3.0 Operation & Maintenance Practices

3.1 Condition Assessment

Assessment criteria:

- What is installed compared to recommended measurements?
- What parameters or variables are available to the (DCS) control system?
- What parameters or variables are available from the (DCS) control system to the condition management system?
- When was it installed? Age of equipment.
- How well was it installed? Proper mounting. Noise protection.
- Long term data for optimization and measure degradation?
- Training of operators? Are they involved in analyzing the data?
- Advanced calculations capability for better outage planning?
- In general, the monitoring and protection system is for the operators. The diagnostic system is for maintenance staff.

3.2 Operations

Monitoring systems include sensors, transducers, monitoring modules, and software. The systems should be fully integrated with a plant's governor and control system to facilitate shutdown and alarming. Many of the vibration behaviors typical to generator units require specialized filtering and signal conditioning. To minimize inaccurate readings and false warnings, the monitoring system must be designed to operate long-term with the expected mechanical loads in a humid environment. The condition monitoring system should have features to prevent false alarms. Typically, the vibration signals must exceed preset limits for a specified time period before warning is given to reduce false trip signals. The monitoring system should also take into account rough zones that may be experienced due to low loads during start-ups.

Turbines in hydroelectric power plants must be able to withstand stresses as a result of rapid starts, stops, and partial loading. These stresses induce fatigue that accumulates and eventually leads to damage. Wear to the journal bearings, damage to the runner blades from corrosion, cavitation, and/or foreign particles in the water supply are other common problems. In many cases, the damage could be avoided with a condition monitoring system and methodology.

Air gap is a measurement of the distance between rotor and stator in the hydro generator. Monitoring of air gap is important as both the stator and the rotor on large hydro machines can be quite flexible, and their shape and location are affected by operating centrifugal, thermal, and magnetic forces. Off-center or out-of-round conditions will at least reduce operating efficiency

and in more severe cases can lead to damage from magnetically induced heating or a rotor-to-stator rub. The rotor flexibility is even more serious in the case of variable speed hydro-turbine generators. Such machines require a stronger rotor dedicated condition monitoring system than a constant speed machine [6].

When a hydro-generator rotor system is balanced and aligned properly, the shaft should spin within the confines of the guide bearings without much force being exerted against these bearings. Clearance of guide bearings can be estimated based on data that is acquired during unit startup. This is because the shaft moves in a random "orbit" throughout the clearance set by the guide bearings for the first few revolutions during unit startup. Therefore, when measuring shaft movement for the first few revolutions (i.e., when the radial forces are not significant because of low speed – e.g. 8 orbits after start-up), guide bearing clearance can be estimated quite accurately using orbit analysis. Usually for vertical machines the accuracy is higher if XY transducers are not connected to a guide bearing cover but are connected to bearing pads. This data can be collected for various temperature conditions of the guide bearings for both cold and hot conditions [5].

Overall reliability and effective operation of a condition monitoring system (including monitoring and protection system) is related to a variety of factors including the following: required range of transducers, location of XY and other transducers, transducer cable routing, and available functionality of the monitoring system.

On many hydro-generators, it is simple to replace a transducer if there is an operational problem. However, for some hydro-generators, transducers have to operate in an enclosed space where quick probe replacement can be problematic. Therefore, for hydro-generators, it is important to consider installing redundant XY-transducers to increase the reliability of the monitoring and protection system. The redundant transducers can be fixed as follows:

- Opposite of the current shaft observing XY-transducers,
- Without significant angular shift when compared to the existing XY-transducers,
- Without significant axial shift when compared to the existing XY-transducers.

The term "shift" means that the distance between the two sets of probe tips has to be greater than the probe separation recommendations in the transducer's technical documentation. If this condition is not met, then an interaction between both transducers can occur (often called cross-talk), decreasing signal to noise ratio [5].

Partial discharge monitoring or analysis (magnetic flux) is a relatively new development. It requires an advanced software package and a good understanding of the unit being monitored. It can determine in real time a failure of stator insulation, stator grounding problems, or stator vibration. Stator anomalies, such as stator vibration, are frequently difficult to isolate when the unit is down for maintenance.

Vibration monitoring remains the most effective technique for detecting the widest range of machine faults, but a number of other techniques are available for specialized monitoring as seen in the Table 1.

Table 1: Condition Monitoring Techniques [9]

	Vibration	Air Gap	Magnetic Flux	Process Values	Cavitation
Mechanical and Bearing					
Unbalance	X				
Misalignment	X				
Rotor rub	X				
Foundation problems	X				
Loose bearings	X				
Oil and lubrication				X	
Stator or rotor bar problems		X			
Generator					
Stator bar/core vibration	X				
Air gap problems		X	X		
Rotor/stator out of roundness		X			
Loose/shorted stator bars or faulty insulation or stator vibration			X		
Turbine					
Turbine runner/blade problems	X				
Wicket gate problems	X				
Turbine blade cavitation	X				X

3.3 Maintenance

Air gap dimension along with rotor and stator shape cannot be effectively measured with the generator out of service because of the combined effects of centrifugal, thermal, and magnetic forces. Early detection of air gap anomalies will facilitate condition-based maintenance by providing the user with important machine data necessary to plan for repairs before scheduled outages. Long term trending of gap and shapes can be correlated with operating conditions and used in operational and rehabilitation planning. Knowing the rotor and stator shapes and minimum air gap dimensions provides the operator with the information needed to remove a machine from service before serious damage (e.g., rotor-to-stator rub) occurs [6].

4.0 Metrics, Monitoring, and Analysis

4.1 Measures of Performance, Condition, and Reliability

Failure modes, that the condition monitoring system helps predict, are listed as follows:

- Wicket gate shear pin failures
- Cavitation
- Blade and shaft cracks
- Bearing rub, fatigue, and overload
- Insufficient bearing lubrication
- Mechanical unbalance or misalignment
- Seal and discharge ring distortion

Insulation breakdown is the ultimate failure in any power generation device. The following faults will lead to the eventual breakdown of insulation.

- Air gap reduction/rub
- Cooling fault
- Winding vibration
- Insulation aging (not directly measureable)

4.2 Analysis of Data

There are numerous software packages available to analyze data from condition monitoring sensors. The high speed data can only be analyzed with computer software that creates charts and calculates variables such as vibration frequencies, changes in air gap, etc. Operators should also be trained to interpret the data and understand how the conditioning monitoring system functions. The operators will then learn to trust the data and use the data for the best local decisions for the plant.

4.3 Integrated Improvements

The best way to gain the benefits of a monitoring system is to take advantage of the economic opportunities offered by various modernization, refurbishment, and new projects to introduce the system and to adapt maintenance practices accordingly. The monitoring system is a major input to a condition-based maintenance program and is a key contributor to capitalizing on high market prices.

The cost of the monitoring system is low compared with the cost of a new power plant. A new plant should automatically be equipped with a monitoring system to minimize maintenance outage periods and to help the unit owner to stay well-informed of the condition of the equipment. [7]

A proper interfacing of a condition management system with a process control system is important for good asset management. A common set up is to have a server with diagnostic software monitoring both the protection system and the control system.

5.0 Information Sources:

[1] GE Energy, *Condition Monitoring Solutions for Hydro – Bently Nevada Asset Condition Monitoring*, 2005

[2] STI Vibration Monitoring, *Eddy Current Transducer Installation*, http://www.stiweb.com/appnotes/PDF%20Files/radial.pdf

[3] Bruel&Kjaer, *Permanent Vibration monitoring on a Hydroelectric Generating Set*, http://www.bksv.com/doc/bo0285.pdf

[4] Orbit, *Exploring the New 3500 Hydro Monitor*, 3rd Quarter 2000, http://www.ge-mcs.com/download/monitoring/3q00cohen.pdf

[5] Orbit, *XY Measurements for Radial Position and Dynamic Motion in Hydro Turbine Generators*, Vol. 30 No. 1, 2010

[6] GE Fact Sheet, *Hydro Generator Air Gap Monitoring*, http://www.gepower.com/o&c/hydro

[7] Hydro World, *Equipment Monitoring: Equipment Condition Monitoring: Sharing Experience*, http://www.hydroworld.com/index/display/article-display/361643/articles/hydro-review/volume-27/issue-2/feature-articles/equipment-monitoring-equipment-condition-monitoring-sharing-experience.html

[8] Orbit, *Condition Monitoring for Hydro Machinery*, 2nd Quarter, 2004

[9] Bruel&KjaerVibro, *Monitoring Solutions*, http://www.bkvibro.com/monitoring-solutions/industries/power-generation/hydroelectric-power-generation/faults-detected.html

[10] *Hydro Life Extension Modernization Guide, Volume 7 – Protection and Control*, EPRI, Palo Alto, CA: 2000. TR-112350-V7.

[11] ISO 7919-5:2005 Mechanical vibration -- Evaluation of machine vibration by measurements on rotating shafts -- Part 5: Machine sets in hydraulic power generating and pumping plant.

It should be noted by the user that this document is intended only as a guide. Statements are of a general nature and therefore do not take into account special situations that can differ significantly from those discussed in this document.

Best Practice Catalog

Francis Turbine Aeration

Revision 2.0, 10/12/2012

1.0 Scope and Purpose

This best practice for Francis turbine aeration addresses the technology, condition assessment, operations, and maintenance best practices with the objective to maximize the unit performance and reliability. The primary purpose of a Francis turbine aeration system is to provide air into the turbine as a way of increasing the downstream dissolved oxygen (DO) level for environmental enhancement.

Hydropower plants likely to experience problems with low DO include those with a reservoir depth greater than 50 feet, power capacity greater than 10 MW, and a retention time greater than 10 days [3, 6]. In general, these include plants with watersheds yielding moderate to heavy amounts of organic sediments and located in a climate where thermal stratification isolates bottom water from oxygen-rich surface water. At the same time, organisms and substances in the water and sediments consume and lower the DO in the bottom layer. For plants with bottom intakes, this low DO water often creates problems downstream from the reservoir, including possible damage to aquatic habitat. Most of the hydropower plants experiencing problems with low DO have Francis turbines. Typically, the most cost-effective method for increasing the downstream DO level is to use some form of Francis turbine aeration [9, 11].

A Francis turbine aeration system's design, operation, and maintenance provide the most significant impact to the efficiency, performance, and reliability for a hydro unit utilizing the system. Aerating Francis turbines can experience insignificant to moderate (approx. 0.2% - 1%) efficiency losses even without aeration due, for example, to baffles or thicker blades compared to conventional, non-aerating technology. Aerating Francis turbines can experience significant (3% to 10% or more) efficiency losses with aeration, depending on the amount of air introduced into the turbine and the locations where the air is introduced [1, 2, 3, 4]. Francis turbines aerating through existing vacuum breaker systems and Francis turbines retrofitted for aeration using hub baffles typically experience restrictions in both capacity and flexibility that can significantly reduce generation [1, 2, 3, 4, 5, 6, 9, 11, 12].

1.1 Hydropower Taxonomy Position

Hydropower Facility → Powerhouse → Power Train Equipment → Turbine → Francis Turbine → <u>Aeration Devices (Francis Turbine Aeration System)</u>

1.1.1 Components of a Francis Turbine Aeration System

A Francis turbine aeration system can be either active or passive in design. An active design includes some type of motorized blower or compressor to force air into the turbine for mixing with water in the turbine and/or draft tube. The far more common passive design emphasized in this best practice typically includes either (1) additions or modifications to the turbine runner or draft tube to create zones of localized low pressure and draw atmospheric air into the turbine (see hub baffles in Figure 1) or (2) a turbine runner specifically designed for aeration (see Figure 2). The components of a Francis turbine aeration system affecting performance and reliability typically consist of air intakes, air flow instrumentation, sound mufflers, control valves, and air supply piping, as shown in Figure 3.

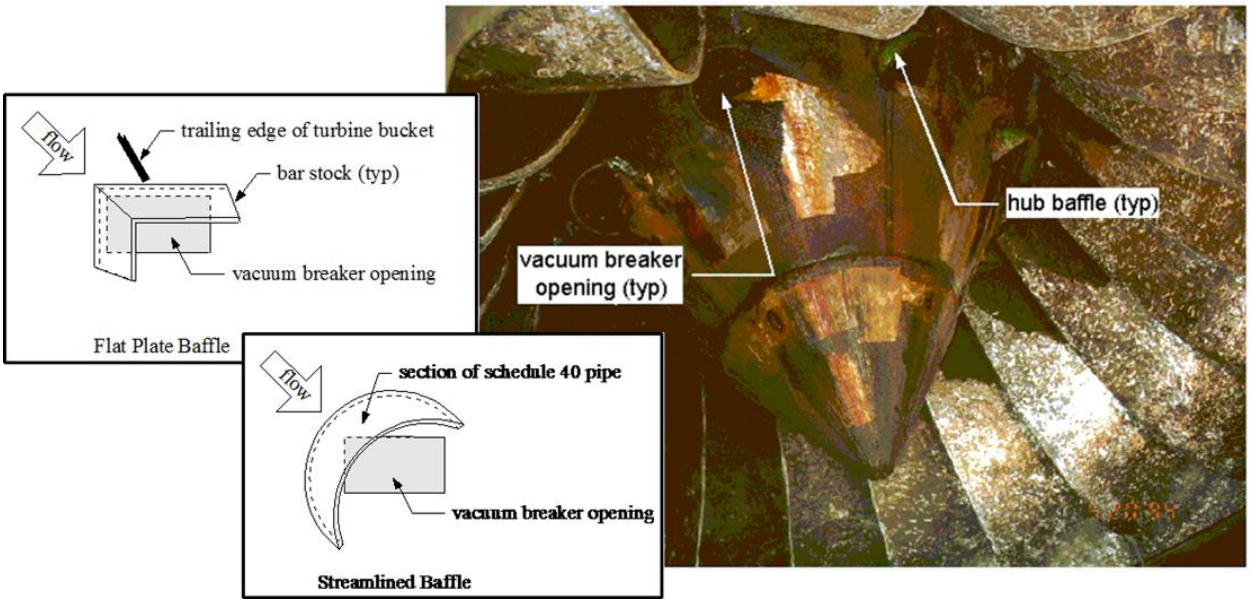

Figure 1: Photograph of Francis Turbine with Hub Baffles and Diagrams Showing Streamlined and Flat Plate Baffles [6]

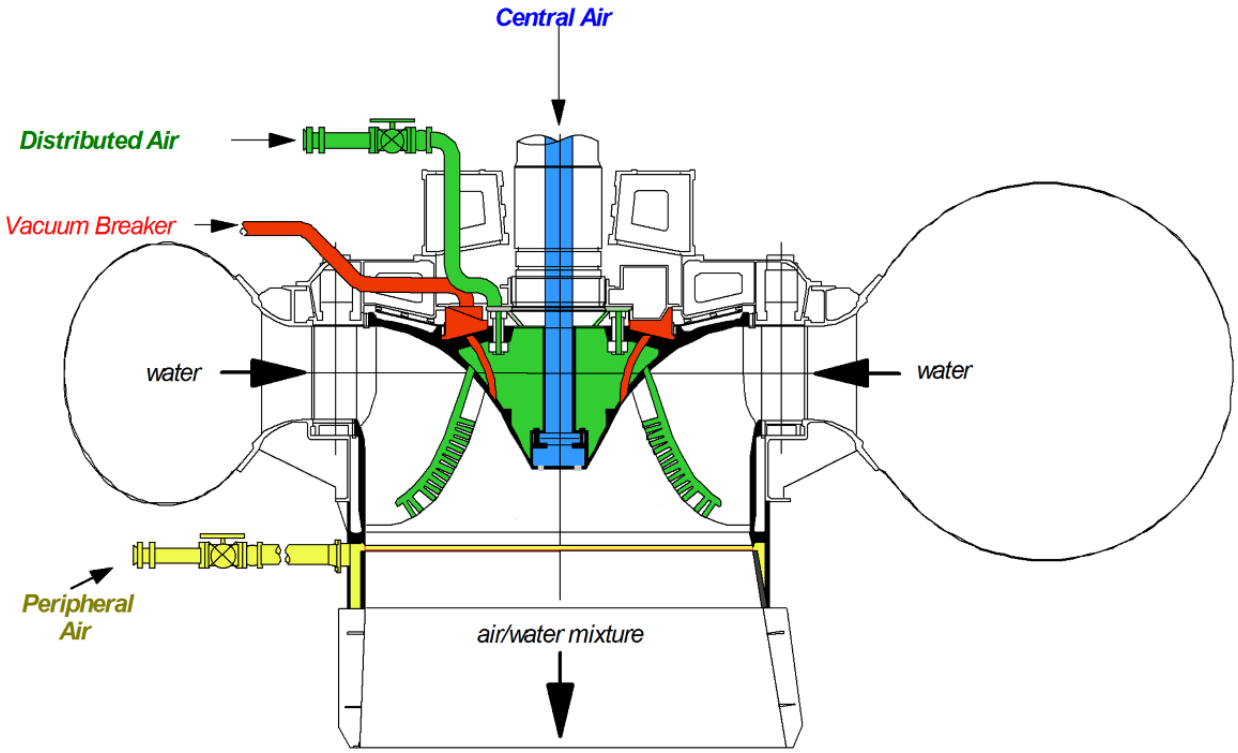

Figure 2: Sectional View of Francis Turbine with Central Aeration (Red, Vacuum Breaker; Blue, Shaft), Peripheral Aeration (Yellow), and Distributed Aeration (Green) [9]

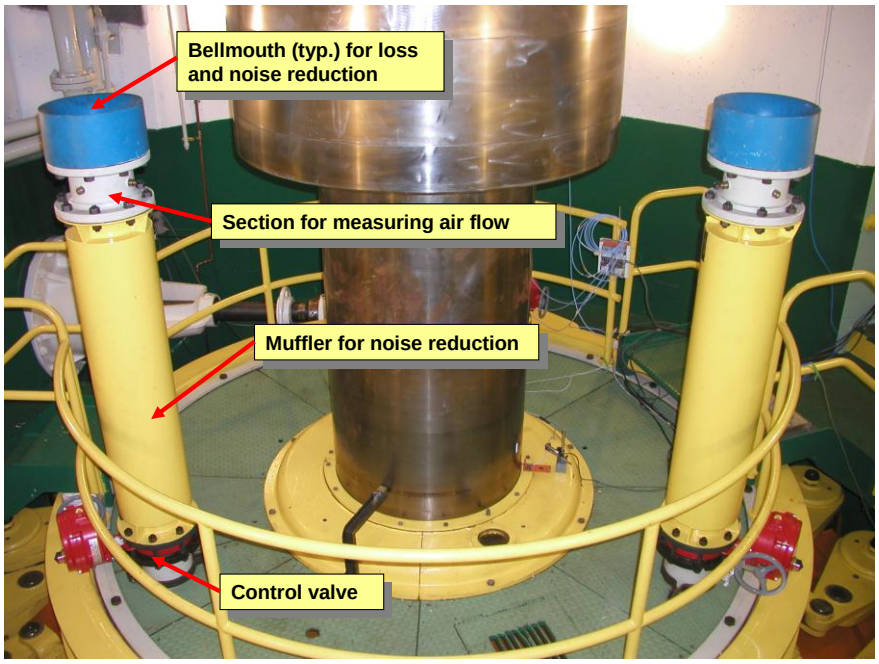

Figure 3: Typical Configuration for a Francis Turbine Aeration System [7]

Air Intakes: Properly designed air intakes, typically bellmouths, reduce the noise levels associated with the air flow and reduce pressure losses in the aeration system, which increases air flow through the aeration system. If a standard nozzle design is used for the intake or if the intake is properly calibrated, the intake can also be used for air flow measurement (see Figure 4), which is discussed in the following section.

Air Flow Instrumentation: A variety of technologies can be used for air flow measurements, including bellmouth inlets, Venturi meters, orifice plates, air velocity traverses (typically using a Pitot-static tube or hot-film anemometer), calibrated elbow meters (calibrate off-site with appropriate upstream piping or calibrate in place with velocity traverses), and calibrated single-point velocity measurements (calibrate off-site with appropriate upstream piping or calibrate in place with velocity traverses). The following instruments may also be required for air flow measurements, depending on the type of air flow meters selected for the aeration system:

- Electronic differential pressure cells (preferred), manometers, or mechanical differential pressure gages;
- Thermometers, thermistors, RTDs, or thermocouples for air temperature measurements at primary flow elements;
- Barometer, mechanical pressure gage, or electronic pressure cell for air pressure measurements at primary flow elements; and
- Psychrometer or other means to determine relative humidity at primary flow elements.

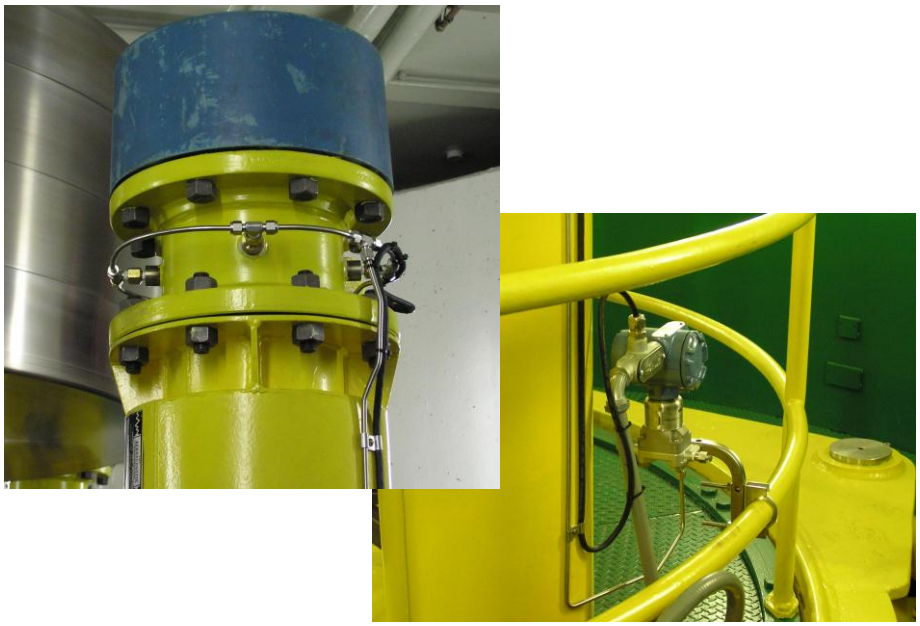

Figure 4: Inlet nozzle and differential pressure cell for determining air flow [7]

Detailed instructions, equations, and charts useful for understanding air flow measurements are provided in ASME 1983 [14] and Almquist et al. 2009 [15]. Although the performance test code for turbines and pump-turbines, ASME PTC 18-2011 [16], does not currently include turbine aeration systems, a revision addressing aeration systems is underway [13].

Sound Mufflers: The function of the sound mufflers is to reduce the noise levels associated with air flows into the Francis turbine aeration system. A properly designed muffler will reduce noise to a safe level without significantly decreasing the air flow.

Control Valves: The control valves are used to turn on or shut off the air flows into a Francis turbine aeration system or to regulate the amount of air flow in the system. Control valves may be manually operated, remotely operated, or integrated into the plant's control system.

Air Supply Piping: The Francis Turbine Best Practice discusses the role of the vacuum breaker system for drawing in atmospheric air at low gate openings to reduce vibration and rough operation. Due to the air piping sizes in typical vacuum breaker systems, a retrofitted vacuum breaker system, even with the addition of hub baffles, rarely supplies enough air to produce a significant increase in downstream DO. Both retrofitted aeration systems and aerating turbines typically require additional air supply piping, as shown in Figures 2 and 3.

1.2 Summary of Best Practices

1.2.1 Best Practices Related to Performance/Efficiency and Capability

Best practices related to performance/efficiency and capability are similar to the Francis Turbine Best Practice, with the addition of aerating operation:

- Establish accurate current unit performance characteristics and limits under both aerating and non-aerating conditions through periodic testing [13, 16].
- Disseminate accurate unit performance characteristics under both aerating and non-aerating conditions to unit operators, local and remote control systems, decision support systems, and other personnel and offices that influence unit dispatch or generation performance.
- Conduct real-time monitoring and periodic analyses of unit performance under both aerating and non-aerating conditions at Current Performance Level (CPL) to detect and mitigate deviations from expected efficiency for the Installed Performance Level (IPL) due to degradation or instrument malfunction.
- Periodically compare the CPL under both aerating and non-aerating conditions to the Potential Performance Level (PPL) under both aerating and non-aerating conditions to trigger feasibility studies of major upgrades.
- Maintain documentation of CPL under both aerating and non-aerating conditions and update when modification to the equipment (e.g., hydraulic profiling, unit upgrade) or the aeration system (e.g., additional air piping, modifications to hub baffles or draft tube baffles, aerating unit upgrade) is made.

1.2.2 Best Practices Related to Reliability and Operations & Maintenance

- Use ASTM A487 / A743 CA6NM stainless steel to manufacture Francis turbine runners to maximize resistance to cavitation and cavitation-enhanced corrosion.
- Clad aeration discharge areas with stainless steel to mitigate cavitation-enhanced corrosion.
- Monitor trends for air flows under similar operating conditions to detect aeration system problems.
- Routinely inspect air intakes, mufflers, air piping, and air outlets and remove any obstructing debris for optimal performance.

1.3 Best Practice Cross-references

- I&C - Automation Best Practice
- Mechanical – Francis Turbine Best Practice
-

2.0 Technology Design Summary

2.1 Technology Evolution

In the 1950s, turbine venting through the vacuum breaker system was introduced in Wisconsin to reduce the water quality impact of discharges from the pulp and paper industry and from municipal sewage systems. Research was also conducted in Europe to develop turbine designs that would boost dissolved oxygen levels in water passing through low head turbines. By 1961, turbine aeration systems were operating in the U. S. at eighteen hydroplants on the Flambeau, Lower Fox, and Wisconsin. During the late 1970s and early 1980s, the Tennessee Valley Authority (TVA) developed small, streamlined baffles, called hub baffles, which reduced energy losses while increasing air flows and operating range for aeration. The hub baffles installed at TVA's Norris Project (see Figure 1) provided DO uptakes averaging 2 to 3 mg/L with typical efficiency losses of 1 to 2% [1].

During the mid-1980s, Voith Hydro Inc. and TVA invested in a joint research partnership to develop improved hydro turbine designs for enhancing DO concentrations in releases from Francis-type turbines. Scale models, numerical models, and full-scale field tests were used in an extensive effort to validate aeration concepts and quantify key parameters affecting aeration performance. Specially-shaped geometries for turbine components were developed and refined to enhance low pressures at appropriate locations, allowing air to be drawn into an efficiently absorbed bubble cloud as a natural consequence of the design and minimizing power losses due to the aeration. TVA's Norris Project, which was scheduled for unit upgrades, was selected as the first site to demonstrate these "auto-venting" or "self-aerating" turbine technologies. The two Norris aerating units contain options to aerate the flow through central, distributed, and peripheral air outlets, as shown in Figure 2.

The successful demonstration of multiple technologies for turbine aeration at TVA's Norris Project in 1995 has helped to develop market acceptance for aerating turbines. Major turbine manufacturers who currently offer aerating turbines include ALSTOM, American Hydro, Andritz, and Voith Hydro.

Performance levels for aerating turbine designs can be stated at three levels as follows:

- The Installed Performance Level (IPL) is described by the unit performance characteristics at the time of commissioning, under aerating and non-aerating conditions. These may be determined from reports and records of efficiency and/or model testing conducted prior to and during unit commissioning.
- The Current Performance Level (CPL) is described by an accurate set of unit performance characteristics determined by unit efficiency and air flow testing, under aerating and non-aerating conditions. This requires the simultaneous measurement of water flow, air flow, head, and power under a range of operating conditions, as specified in the standards referenced in this document [14, 15, 16].
- Determination of the Potential Performance Level (PPL) typically requires reference to new aerating turbine design information from the turbine manufacturer to establish the achievable unit performance characteristics of the replacement turbine under aerating and non-aerating conditions.

2.2 State of the Art Technology

For aerating Francis turbines, turbine efficiencies under aerating and non-aerating conditions are the most important factor in an assessment to determine rehabilitation and replacement, as well as proper operation.

When properly designed, hub baffles typically reduce efficiency by 0.5% to 1% without aeration and 5% or more with aeration, depending on the air flows [1, 2, 3, 4, 5, 9]. In the cross-section through an aerating Francis turbine shown in Figure 2, central aeration through the turbine's vacuum breaker system is shown in red, and central aeration through the shaft is shown in blue. Using an existing vacuum breaker system is typically the aeration option with the lowest initial cost. However, central aeration has the largest effect on unit efficiency, and the capacity and operational range for the turbine may be severely limited [1, 2, 3, 11, 12].

Figure 2 also shows peripheral aeration in yellow and distributed aeration through the trailing edges of the turbine blades in green. Distributed aeration often has the smallest effect on unit efficiency and the highest oxygen transfer into the water (i.e., increased DO), followed by peripheral aeration [11, 12]. For example, a recent study compared the central, peripheral, and distributed aeration systems needed to provide a 5 mg/L DO increase for a plant in the southern USA [12]. In the vicinity of the maximum efficiency, the predicted air flow requirements (i.e., void fraction in %) for central, peripheral, and distributed aeration systems were 7.2%, 6.9%, and 6.5%, respectively. The corresponding efficiency decreases (i.e., non-aerating efficiency minus aerating efficiency, in %) were greater than 10%, 7.4%, and 3.4%, respectively. These predictions are consistent with field test results reported for other sites [6, 8, 11].

In another example, aerating and non-aerating performance testing was conducted according to ASME PTC-18 standards [16] at a hydro plant with multiple types of aerating runners, including two eighty-years-old original runners retrofitted for central aeration, two modern runners installed in 2002 and designed for central aeration, and four state of the art runners installed in 2008 with distributed aeration (see Figure 5) through the trailing edges of the runners [11]. Figure 6 shows the aerating and non-aerating turbine efficiencies versus turbine outputs for the three unit types at this plant, operating at a net head of 95 ft. The turbine efficiencies have been normalized to the maximum measured efficiency of the most efficient unit.

In Figure 6, note the relative efficiencies for the three unit types, the relative effects of aeration on efficiency for central and distributed aeration systems, and the relative amounts of air aspirated by the three unit types. Under non-aerating operation, the 2008 replacement runners (distributed aeration) have the highest peak efficiency, with both the original turbines (retrofitted central aeration) and the 2002 replacement runners (designed central aeration) about 4% lower.

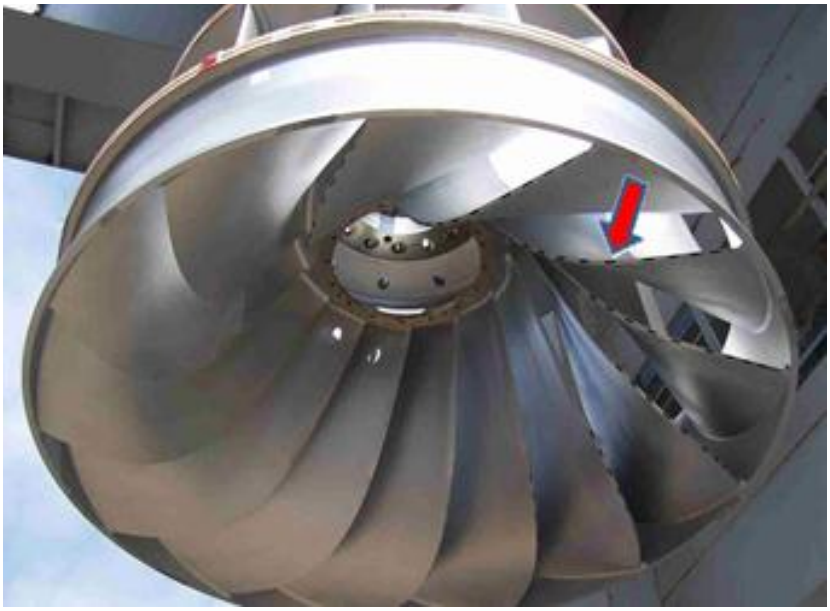

Figure 5: State of the Art Aerating Turbine with Distributed Aeration

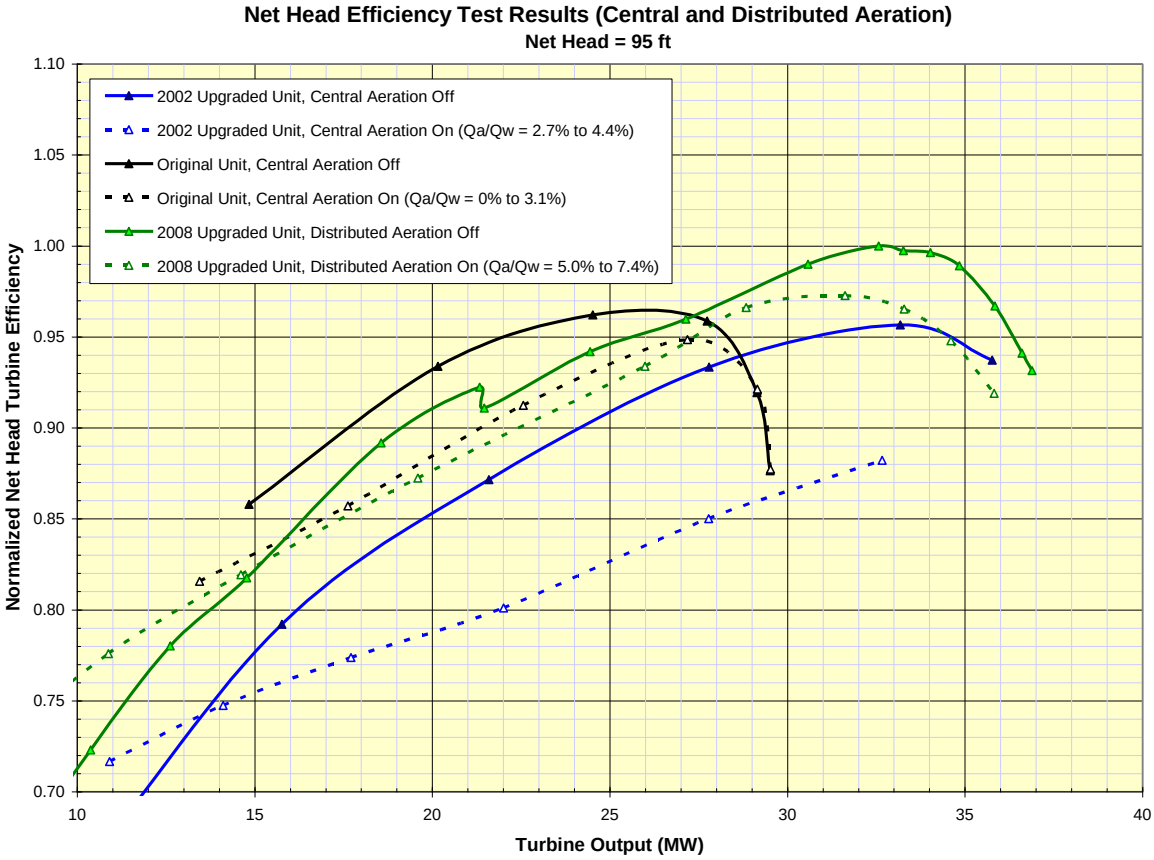

Figure 6: Normalized Turbine Efficiencies versus Turbine Output for Three Unit Types [11]

Under aerating operation, peak efficiencies for the 2008 replacement runners, the 2002 replacement runners, and the retrofitted original units drop by about 2.5%, 7%, and 2% (with very low air flows for the retrofitted original units), respectively. Air flow to water flow ratio ranges under aerating operation for the 2008 replacement runners, the 2002 replacement runners, and the retrofitted original runners are 5.0% to 7.4%, 2.7% to 4.4%, and 0% to 3.1%.

The operational challenges for efficient power operation and effective environmental operation of the plant's eight units under non-aerating and aerating conditions, over a range of heads, and with rapid load swings are apparent, emphasizing the importance of proper control system design [11].

3.0 Operation & Maintenance Practices

3.1 Condition Assessment

After the commercial operation begins, how an aerating Francis turbine is operated and maintained will have a major impact on reducing efficiency losses and maintaining reliability. Materials for turbine runners are usually cast iron, steel, or stainless steel. As a best practice, the most common material being used today for new state of the art runners is ASTM A487 / A743 CA6NM stainless steel (see Francis Turbine Best Practice).

Aeration systems for Francis turbines can take the form of more complex and more energy-consumptive active systems, such as motorized blowers, to the less complex passive systems, such as baffles and aerating runner designs. Focusing on the most common aeration system designs (i.e., passive systems), a simple condition assessment includes inspections of the air intakes, the air discharge passages in the turbine, the dissolved oxygen monitoring equipment, and any observable cavitation or corrosion-related damage that might affect normal operation. A decrease in the expected dissolved oxygen uptake in the waterway downstream from the plant is a good indicator of degradation in the condition of the aeration device.

A comprehensive condition assessment for a Francis turbine aeration system requires information on:

(1) the plant's environmental and regulatory environment, including

- incoming DO, TDG, and water temperature levels throughout the year
- measurement locations and methods for incoming DO, TDG, and temperature (typically, multiple locations in penstock or spiral case)
- regulatory requirements for downstream DO, TDG, and temperature
- measurement locations and methods for downstream DO, TDG, and temperature
- record of compliance and non-compliance;

(2) the plant's operational environment, including

- daily and seasonal operational patterns
- typical tailwater range during periods of aeration
- other restrictions affecting operations (e.g., rough zones, special requirements for functioning of aeration systems);

(3) details of the specific aeration system, including

- type of aeration system (e.g., vacuum breaker, hub baffles, central, peripheral, distributed, multiple methods)
- diameters and lengths of aeration piping

- control valve characteristics;

(4) environmental and hydraulic performance of the specific aeration system, including

- pressures at aeration outlets over the operational range
- head losses for the aeration piping
- air flows through the aeration piping as a function of tailwater elevation, water flow, and control valve position
- turbine efficiency without aeration as a function of power and head
- turbine efficiency with aeration as a function of power, head, and air flow
- DO uptake over the range of operational conditions
- Corresponding TDG levels over the range of operational conditions.

3.2 Operations

Because aerating Francis turbines typically have a narrow operating range for peak efficiency (see Figure 6, for example), it is extremely important to provide plant operators or automated control systems with accurate operating curves for the units under aerating and non-aerating conditions. The curves usually originate from the manufacturer's model test data and from post-installation performance testing. Because turbine performance can degrade over time, periodic performance testing must be carried out to determine unit efficiencies and to update the performance curves used for operational decisions. The ten-year testing cycle recommended in the Francis Turbine Best Practice is typically appropriate.

Francis turbine aeration systems may be operated manually or the operation may be integrated into a plant's control system. The detailed aeration instrumentation and controls are site-specific. Aeration systems are often operated conservatively to ensure that environmental requirements for DO levels are maintained. However, this can lead to higher levels of total dissolved gases (TDG), as well as unnecessary efficiency losses due to excessive air flows into the turbine. Some sites have TDG environmental requirements in addition to DO requirements, and the TDG requirements can have an additional negative impact on plant operation and further reduce overall plant efficiency [11].

3.3 Maintenance

For Francis turbine aeration systems, all air flow intakes and passageways must be clean and free from obstructions to operate properly. Normal maintenance of a Francis turbine aeration system includes periodic inspection (during routine inspections) and testing of components to ensure that the aeration system is operating according to design. Areas adjacent to the air discharge locations in the turbine or draft tube must be monitored for damage due to cavitation-influenced corrosion. As a best practice, the area surrounding the air discharge locations should be clad with stainless steel to mitigate damage.

The associated instrumentation for Francis turbine aeration systems, including incoming DO levels, compliance point DO levels, air flow rates, air valve control, and air valve positions, must be calibrated and maintained in good working order. Instrumentation for hydraulic performance data, including unit water flow rates, headwater elevations, tailwater elevations, and unit powers, must also be calibrated and maintained in good working order. Data on incoming DO levels, air valve positions, air flow rates, and air temperatures should be recorded at time intervals that can be correlated with other relevant plant data. As a best practice, hydraulic performance data and environmental performance data (incoming DO levels, compliance point DO levels, compliance point TDG levels, unit air flow rates, air temperatures) should be simultaneously recorded and stored in a common database.

4.0 Metrics, Monitoring, and Analysis

4.1 Measures of Performance, Condition, and Reliability

The fundamental performance measurement for a hydro turbine is described by the efficiency equation, which is defined as the ratio of the power delivered by the turbine to the power of the water passing through the turbine. The general expression for this efficiency (η) is

$$\eta = \frac{P}{\rho g Q H}$$

where P is the output power, ρ is the density of water, g is the acceleration of gravity, Q is the water flow rate through the turbine, and H is the head across the unit [16].

The condition of an aerating Francis turbine can be monitored by the Condition Indicator (CI) as defined according to the HAP Condition Assessment Manual [10].

Unit reliability characteristics, as judged by the unit's availability for generation, can be monitored by use of the North American Electric Reliability Corporation (NERC) performance indicators, such Equivalent Availability Factor (EAF) and Equivalent Forced Outage Factor (EFOR), which are used universally by the power industry [17]. However, hydro plant owners typically do not designate whether or not their Francis turbines are aeration-capable and do not differentiate between aerating and non-aerating operation.

4.2 Data Analyses

The key measurements for hydraulic performance include headwater elevation, H_{HW} (ft); tailwater elevation, H_{TW} (ft); water flow rate through Unit N without aeration, Q_N (cfs); power output for Unit N without aeration, P_{ON} (MW); and T_H, the measurement timestamp for hydraulic data. The key measurements for environmental performance include incoming DO level for Unit N, L_{DON} (mg/L); incoming TDG level for Unit N, L_{TDGN} (%); incoming water temperature, F_{WTN} (degrees F); downstream DO level for plant at the compliance location, L_{DOC} (mg/L); downstream TDG level, L_{TDGC} (%) at the compliance location; and downstream water temperature, F_{WTC} (degrees F), at the compliance location; air flow rate through Unit N, Q_{AN} (cfs); water flow rate through Unit N with aeration, Q_{NA} (cfs); power output for Unit N with aeration, P_{ONA} (MW); and T_E, the measurement timestamp for environmental data. Measurements can be near real-time or periodic (hourly, daily), depending on the site details, license requirements, and operational requirements.

The unit efficiency η_N (nondimensional) for operation without aeration is:

$$\eta_N = P_{ON}/[K\rho g Q_N(H_{HW} - H_{TW})/(1{,}000{,}000)]$$

where K is a dimensional constant, ρ is the density of water at Unit N, and g is the acceleration of gravity at Unit N. For most cases, using Kρg = 84.5 provides satisfactory results.

The unit efficiency η_{NA} (nondimensional) for operation with aeration is:

$$\eta_{NA} = P_{ONA}/[K\rho g Q_{NA}(H_{HW} - H_{TW})/(1{,}000{,}000)]$$

References provide detailed guidance on performing the key hydraulic measurements [16] and the key environmental measurements [14, 15].

The unit efficiency loss due to aeration is equal to η_N minus η_{NA} for a given power level. However, detailed data analyses are required to determine what portion of these efficiency losses are avoidable, due to over-aeration, suboptimization, etc., and to compute the associated revenue losses. In general, aeration-induced efficiency losses greater than 2% to 3% warrant further investigation. The costs associated with the aeration-induced efficiency losses, capacity losses, and reductions in operational flexibility should be established for comparison with the associated revenue losses and used to optimize aeration operations and to evaluate and justify new aeration systems, including turbine replacements.

The condition assessment of an aerating Francis turbine is quantified through the CI, as described in the HAP Condition Assessment Manual [10]. The overall CI is a composite of the CI derived from each component of the turbine. This methodology can be applied periodically to derive a CI snapshot of the current turbine condition so that it can be monitored over time and studied to determine condition trends that can impact performance and reliability.

The reliability of a unit as judged by its availability to generate can be monitored through reliability indexes or performance indicators as derived according to NERC's Appendix F, *Performance Indexes and Equations* [17].

4.3 Integrated Improvements

Data on lost efficiency, lost capacity, and operational restrictions due to Francis turbine aeration systems can be used to quantify lost revenues from generation and ancillary services, and the economic losses can be used to evaluate and justify funding for aeration system improvements, including turbine replacement.

The periodic field test results should be used to update the unit operating characteristics and limits. Optimally, the updated results would be integrated into an automated control system. If an automated control system is not available, hard copies of the updated curves and limits should be made available to all relevant personnel, particularly unit operators, and the importance of the updated results should be emphasized, discussed, and confirmed.

5.0 Information Sources:

Baseline Knowledge:

1. Bohac, C. E., J. W. Boyd, E. D. Harshbarger, and A. R. Lewis, Techniques for Reaeration of Hydropower Releases, Technical Report No. E-83-5, Vicksburg, Mississippi: U. S. Army Corps of Engineers, February 1983.

2. Wilhelms, S. C., M. L. Schneider, S. E. Howington, *Improvement of Hydropower Release Dissolved Oxygen with Turbine Venting*, Technical Report No. E-87-3, Vicksburg, Mississippi: U. S. Army Corps of Engineers, March 1987.

3. EPRI, *Assessment and Guide for Meeting Dissolved Oxygen Water Quality Standards for Hydroelectric Plant Discharges*, Report No. GS-7001, Palo Alto, California: ElectricPower Research Institute (EPRI), November 1990.

4. Carter, J., "Recent Experience with Hub Baffles at TVA," *ASCE Proceedings of Waterpower 95*, San Francisco, California, July 25-28, 1995.

5. EPRI, *Maintaining and Monitoring Dissolved Oxygen at Hydroelectric Projects: Status Report*, Report No. 1005194, Palo Alto, California: Electric Power Research Institute (EPRI), May 2002.

State of the Art:

6. Hopping, P. N., P. A. March and P. J. Wolff, "Justifying, Specifying, and Verifying Performance of Aerating Turbines," *Proceedings of HydroVision 98*, Reno, Nevada, July 28-31, 1998.

7. March, P. A., R. K. Fisher, and V. G. Hobbs, "Water and Energy Infrastructure: Meeting Environmental Challenges for a Sustainable Water and Energy Future," USACE 2003 Infrastructure Systems Conference, Las Vegas, Nevada, May 6-8, 2003.

8. Foust, J. M., R. K. Fisher, P. M. Thompson, M. M. Ratliff, and P. A. March, "Integrating Turbine Rehabilitation and Environmental Technologies: Aerating Runners for Water Quality Enhancement at Osage Plant," *Proceedings of Waterpower XVI*, Spokane, Washington, July 27-30, 2009.

9. March, P. A., *Hydropower Technology Roundup Report: Technology Update on Aerating Turbines*, Report No. 1017966, Palo Alto, California: Electric Power Research Institute, 2009.

10. ORNL et al., *HAP Condition Assessment Manual*, October, 2011.

11. March, P. A., "Hydraulic and Environmental Performance of Aerating Turbine Technologies," *EPRI-DOE Conference on Environmentally-Enhanced Hydropower Turbines: Technical Papers*, Palo Alto, California: Electric Power Reaearch Institute (EPRI) and Washington, D.C.: U. S. Department of Energy (DOE), Report No. 1024609, December 2011.

12. Foust, J. M., and S. Coulson, "Using Dissolved Oxygen Prediction Methodologies in the Selection of Turbine Aeration Equipment," *EPRI-DOE Conference on Environmentally-Enhanced Hydropower Turbines: Technical Papers*, Palo Alto, California: Electric Power

Reaearch Institute (EPRI) and Washington, D.C.: U. S. Department of Energy (DOE), Report No. 1024609, December 2011.

13. Kirejczyk, J., "Developing Environmental Standards and Best Practices for Hydraulic Turbines," *EPRI-DOE Conference on Environmentally-Enhanced Hydropower Turbines: Technical Papers*, Palo Alto, California: Electric Power Reaearch Institute (EPRI) and Washington, D.C.: U. S. Department of Energy (DOE), Report No. 1024609, December 2011.

Standards:

14. ASME, *Fluid Meters: Their Theory and Application*, New York, New York: American Society of Mechanical Engineers (ASME), 1983.

15. Almquist, C. W., P. N. Hopping, and P. J. Wolff, "Draft Test Code for Aerating Hydroturbines," TVA Report No. WR98-1-600-125, Norris, Tennessee: Tennessee Valley Authority (TVA), August 1998.

16. ASME, *Performance Test Code 18: Hydraulic Turbines and Pump-Turbines*, ASME PTC 18-2011, New York, New York: American Society of Mechanical Engineers (ASME), 2011.

17. NERC, *Appendix F: Performance Indexes and Equations*, January 2011.

It should be noted by the user that this document is intended only as a guide. Statements are of a general nature and therefore do not take into account special situations that can differ significantly from those discussed in this document.

For overall questions
please contact:

Brennan T. Smith, Ph.D., P.E.
Water Power Program Manager
Oak Ridge National Laboratory
865-241-5160
smithbt@ornl.gov

or

Qin Fen (Katherine) Zhang, Ph. D., P.E.
Hydropower Engineer
Oak Ridge National Laboratory
865-576-2921
zhangq1@ornl.gov